VTT EXPERT SERVICES LTD

# Guidelines for Commercial Craft

Version 2016.2

The objective of the guidelines is to provide a basis for designing and construction of commercial craft so that a reasonable level of safety and environmental sustainability is achieved.

The guidelines are developed by VTT Expert Services Ltd., Finland, and is primarily used for the assessment of small commercial craft for statutory compliance

VTT EXPERT SERVICES LTD

Return to the cover page

TABLE OF CONTENTS

1. INTRODUCTION AND PRINCIPLES OF APPLICATION ..... 35

1.1 Objective ..... 35

1.2 Background ..... 35

1.3 Principles when using ISO-standards ..... 35

1.4 The Rules vs. International Conventions ..... 36

1.5 Unusual arrangements ..... 36

1.6 Scope of the Rules ..... 36

Scope ..... 36

Length of the craft ..... 36

Types of craft ..... 37

Hull construction materials ..... 37

The definitions “Under Way” and “At Sea” ..... 37

Conditions of use ..... 37

Design Categories ..... 37

Temperatures and water salinity ..... 38

Additional Notations ..... 38

Cargo Transport ..... 38

Towing ..... 38

Oil Spill Combat ..... 38

Passenger Transport ..... 39

Self-Righting ..... 39

One Compartment Damage Stability ..... 39

Ice Reinforcement ..... **Error! Bookmark not defined.**

Deck Crane ..... 39

Hovercraft ..... 39

Procedures for assessment ..... 40

Craft identification ..... 40

Individual approval ..... 40

Sisterships ..... 40

Type approval plus production control ..... 40

Documentation ..... 40

Reporting ..... 40

Symbols and units commonly used in these Rules ..... 41

The weight and dimensions of crew ..... 41

Symbols ..... 42

CRAFT CONCEPTS ..... 44

Objective ..... 44

References ..... 44

Selection of craft concepts ..... 44

Fully enclosed craft ..... 44

Partially protected craft ..... 45

Craft with buoyancy chambers for remaining afloat ..... 46

Open craft without buoyancy chambers ..... 47

PREVENTION OF DOWNFLOODING ..... 48

Objective ..... 48

References ..... 48

Documentation ..... 48

Openings and closing appliances, general ..... 48

Application ..... 48

Exemptions ..... 49

Requirements for openings, and closing appliances ..... 49

Properties affecting the requirements ..... 49

Definitions for types of openings, and closing appliances ..... 49

Doorways ..... 49

Hatchways ..... 49

Windows and portlights ..... 49
Hull ports ..... 50
Air pipes ..... 50
Through-hull fittings ..... 50
Openings without closing appliances ..... 50
Local deck height HD ..... 50
Application areas for openings ..... 50
Opening's closing status in operation ..... 51
Definitions and requirements common for all closing appliances ..... 51
Coaming- and sill heights ..... 51
The length of the shorter side of the opening ..... 53
Degree of Watertightness ..... 53
Latches and hinges for locking ..... 54
Hinged closing appliances ..... 54
Sliding hatches ..... 54
CE-marked closing appliances ..... 54
Particular requirements for closing appliances in Application area 1 ..... 54
Protection of gaskets ..... 55
Closing appliances on cargo decks ..... 55
Requirements for openings always open during operation. ..... 55
Allowed locations for openings always open during operation ..... 55
Preventing water from entering ..... 55
Requirements for doors ..... 56
Door sills ..... 56
Direction of opening for doors ..... 56
Latches and hinges ..... 56
Requirements for hatches ..... 56
Special requirements for hatches ..... 56

Requirements for windows ..... 57
Special requirements for windows ..... 57
Requirements for hull ports ..... 57
Freeboard to the lower edge of hull ports ..... 57
Strength ..... 57
Watertightness ..... 58
Hinges and latching mechanisms ..... 58
Requirements for air pipes ..... 58
Through-hulls connected to on-board systems ..... 58
General ..... 58
Through-hull fittings and seacocks ..... 59
Accessibility ..... 59
Requirements for on-board systems connected to through-hulls ..... 60
Galvanic corrosion ..... 60
Hose connections ..... 60
Penetrations in outboard engine wells ..... 60
Cable and hose penetrations ..... 60
Ventilation openings ..... 60
FREEBOARD AND INTACT STABILITY ..... 66
Objective ..... 66
References ..... 66
Documentation ..... 66
Assessment alternatives and requirements ..... 67
General ..... 67
Definitions and assumptions ..... 73
Lightweight ..... 73
Determination of lightweight and centre of gravity ..... 73
Maximum load ..... 74

Loading conditions ..... 74

Loading conditions to be assessed ..... 74

Minimum operating condition, loading condition LC1 ..... 75

Fully loaded, departure, loading condition LC2 ..... 75

Fully loaded, arrival, loading condition LC3 ..... 75

Offset load, loading condition OFFSET ..... 75

Assumptions when assessing stability ..... 75

Hull model for stability calculation ..... 75

Location of loading components ..... 76

Free surfaces in the tanks ..... 76

Icing ..... 76

The effect of recesses on stability ..... 76

Reserve buoyancy ..... 77

General ..... 77

The buoyancy of the bow ..... 77

Downflooding height (all craft) ..... 78

Heeling angle and residuary freeboard with offset load ..... 78

Definitions ..... 78

The loading condition when measuring heeling angle, and residuary freeboard or downflooding angle ..... 79

Maximum righting moment ..... 79

The GZ-curve properties ..... 79

Rolling with wind and waves on the beam (weather criterion) ..... 79

Wind induced heel ..... 81

Buoyancy when swamped ..... 81

General ..... 81

Types of flotation elements and their requirements ..... 82

Arrangements for buoyancy ..... 82

Assessment of buoyancy ..... 82

Multihulls susceptible to inversion ..... 83

Susceptible to inversion ..... 83

Requirements ..... 83

DECK ARRANGEMENT AND RECESSES ..... 84

Purpose ..... 84

References ..... 84

Documentation ..... 84

Definitions ..... 85

Recesses ..... 85

Basic requirements for recesses ..... 85

Watertight recess ..... 85

Requirements for deck arrangements ..... 85

Weatherdeck arrangement ..... 85

Non-weathertight superstructures in fully enclosed craft ..... 85

Detailed requirement for recesses ..... 85

Height of recess bottom above waterline ..... 86

Maximum draining time ..... 86

Area requirement for drain openings ..... 87

Example arrangement ..... 87

Drain area per side ..... 88

Draining test ..... 89

Number and location of drains ..... 89

Sill heights ..... 89

Watertightness ..... **Error! Bookmark not defined.**

PREVENTION AND CONTROL OF LEAKS, BILGE SYSTEMS ..... 90

Purpose ..... 90

References ..... 90

Documentation ..... 90
Requirements ..... 90
Leak control ..... 90
Limited unsinkability ..... 91
Principle ..... 91
The means for achieving limited unsinkability ..... 91
Draining arrangements for the bilge ..... 92
General ..... 92
Compartments to be drained ..... 92
Requirements for the bilge draining system ..... 93
Main bilge draining system ..... 94
Secondary bilge pumping system ..... 96
Measurement of bilge pumping capacity ..... 97
Multihull bilge draining arrangements ..... 97
Alarm for high bilge water level ..... 98
Material specifications for bilge draining systems ..... 98
Strainers for suction hoses or bilge pumps ..... 98
DESIGN PRESSURES AND LOADS ..... 100
Objective ..... 100
References ..... 100
Principles ..... 100
Global loads ..... 100
Local loads ..... 100
Extension of loads ..... 100
Bottom design pressure ..... 101
Side design pressure ..... 102
Design pressure for decks ..... 103
Design pressure for superstructures ..... 103

Watertight bulkheads ..... 104

Design pressure for integral tanks ..... 104

Design pressure for multihull wet-decks ..... 104

Global loadcases for multihull craft ..... 104

Forces on transoms for high-power outboard motors ..... 105

Connection of RIB pontoons ..... 106

Design pressure correction factors ..... 107

Design category factor ..... 107

Area reduction factor ..... 107

Design pressure correction based on longitudinal position ..... 108

Design pressure correction based on vertical position ..... 109

DESIGN PRINCIPLES, FIBRE-REINFORCED PLASTIC ..... 111

Objective ..... 111

References ..... 111

Principles of analysis ..... 111

Simple assessment method ..... 111

Assessment using First Principles ..... 111

Finite Element Method (FE) ..... 111

Assumptions ..... 112

Local and global strength/stiffness ..... 112

Hierarchy of the load carrying elements ..... 112

Sandwich panels ..... 113

Global strength and stiffness ..... 113

Requirements for structural arrangement ..... 114

Displacement craft, design category D ..... 114

Planing craft ..... 114

Support for longitudinal stiffeners ..... 114

Keels, stem and chines ..... 114

Torsion stiffness and -strength ..... 114

Superstructure support points ..... 114

Hull stiffeners ..... 115

Continuity of stiffeners ..... 115

Straightness and local discontinuities of stiffeners ..... 115

Safety against buckling ..... 115

Transverse stiffeners ..... 115

Floating framing ..... 115

Other stiffeners ..... 115

Laminate design ..... 116

Fibres carry the load ..... 116

Laminate balance ..... 116

Laminates containing several types of fibres ..... 116

Layer drop-off ..... 116

Single skin laminates ..... 116

Sandwich ..... 117

Transition from sandwich to single skin ..... 117

Laminate bonding ..... 117

Bonding of stiffeners ..... 117

Bonding of bulkheads ..... 118

Adhesive bonding ..... 118

Other structural details ..... 119

Openings in load-bearing structures ..... 119

Sharp corners ..... 119

Special issues for sandwich construction ..... 119

Other structural details ..... 119

FIBRE REINFORCED PLASTICS MATERIAL ..... 121

Objective ..... 121

References ..... 121

Documentation ..... 121

Resins ..... 121

Fibre reinforcement ..... 121

Compability of fibres with resin ..... 121

Mechanical properties of laminates ..... 122

9.8. Determination of mechanical properties by testing ..... 122

Determination of mechanical properties by a nominal fibre content ..... 122

Nominal fibre content ..... 123

Mechanical properties ..... 123

Sandwich core materials ..... 123

Mechanical properties of sandwich core materials ..... 123

Values to be used for scantling determination ..... 123

Adhesives ..... 124

Other materials ..... 124

SCANTLINGS DETERMINATION, FIBRE REINFORCED PLASTICS ..... 134

Objective ..... 134

References ..... 134

Documentation ..... 134

List of symbols ..... 134

Dimension of panels ..... 135

Scantlings requirements, single skin panels ..... 136

Scantlings requirement, sandwich panels ..... 137

Bending strength criterion ..... 137

Stiffness criterion ..... 137

Shear criterion ..... 138

Sandwich core minimum compressive strength in hull bottom ..... 138

Minimum amount of fibre reinforcement for local strength ..... 138

Correction factors for panels ..... 139

Correction for panel curvature ..... 139

Correction based on panel aspect ratio ..... 140

Stiffeners ..... 140

General ..... 140

Section modulus ..... 140

Second moment of area ..... 141

Effective flange ..... 142

Cross-section of stiffener web ..... 142

Orthotropic stiffeners ..... 143

Buckling of stiffeners ..... 143

Reinforced shell areas ..... 143

Reinforced keel ..... 143

Reinforced stem ..... 143

Reinforced chine ..... 143

Edge of deck and hull/deck joint ..... 144

Highly loaded structures ..... 144

Engine foundations ..... 144

Transoms for outboard and sterndrive engines ..... 144

Attachment of mooring and other highly loaded fittings ..... 145

Attachment of railings, handholds and lifeline hooking points ..... 145

Design of attachment points ..... 145

Attachment of RIB-pontoon ..... 145

Design stresses ..... 146

PRODUCTION OF FIBRE-REINFORCED PLASTIC CRAFT ..... 147

Objective ..... 147

References ..... 147

Documentation ..... 147

Workshop conditions ..... 147

Material storage ..... 148

Lamination ..... 148

Requirements for all types of laminates ..... 148

Polyester- and vinylester laminates ..... 149

Epoxy laminates ..... 149

Sandwich construction ..... 149

Secondary lamination ..... 150

Polyester- and vinylester laminates ..... 150

Epoxy laminates ..... 150

Adhesive bonding ..... 150

Curing ..... 151

Thickness gauging ..... 151

Material testing ..... 151

STRUCTURAL DESIGN PRINCIPLES, ALUMINIUM ..... 152

Objective ..... 152

References ..... 152

Principles of structural analysis ..... 152

Simplified calculation method ..... 152

Direct calculation of stresses and strains ..... 152

Assumptions ..... 153

Assumptions regarding local vs. global strength and stiffness ..... 153

Hierarchy of the load carrying elements ..... 153

Global strength and stiffness ..... 154

Structural arrangement ..... 154

Displacement craft, design category D ..... 154

Planing craft ..... 155

Support for longitudinal stiffeners ..... 155

Keels, stem and chines ..... 155

Torsional stiffness and -strength ..... 155

Superstructure support points ..... 155

Hull stiffeners ..... 155

Continuity and termination of stiffeners ..... 155

Straightness and local discontinuities of stiffeners ..... 155

Safety against buckling ..... 156

Transverse stiffeners ..... 156

Floating stiffeners ..... 156

Other stiffeners ..... 156

Construction details ..... 156

Joining plates of different thickness ..... 156

Fastening and joints of stiffeners ..... 156

Openings in load-bearing structures ..... 157

Sharp edges ..... 157

Other details ..... 157

Corrosion ..... 157

Welding ..... 158

ALUMINIUM MATERIALS ..... 161

Objective ..... 161

References ..... 161

Documentation ..... 161

Mechanical properties of aluminium alloys ..... 161

Group 1. Non-heat treatable alloys ..... 161

Group 2. Heat treatable alloys ..... 162

Other alloys ..... 162

Welding consumables ..... 163

SCANTLINGS DETERMINATION, ALUMINIUM ..... 164

Objective ..... 164

References ..... 164

Documentation ..... 164

List of symbols ..... 164

Dimension of panels ..... 165

Scantlings requirements, aluminium panels ..... 166

Correction factors for panels ..... 166

Correction for alloy strength ..... 166

Correction based on panel curvature ..... 167

Correction based on panel aspect ratio. ..... 167

Stiffeners ..... 168

Section modulus ..... 168

Effective flange ..... 169

Shear area of stiffener webs ..... 169

Reinforcements ..... 169

Highly loaded structures ..... 170

Engine foundations ..... 170

Transoms for outboard and sterndrive engines ..... 170

Attachment of mooring and other highly loaded fittings ..... 170

Attachment of railings, handholds and lifeline hooking points ..... 170

Attachment of RIB-pontoon ..... 170

Design stresses ..... 171

PRODUCTION OF ALUMINIUM BOATS ..... 172

Objective ..... 172

References ..... 172

Documentation ..... 172

Workshop conditions ..... 172

Materials ..... 173

Cutting and forming ..... 173

Welding ..... 173

Welder's qualification ..... 173

Welding Procedure Specification ..... 173

Surveys ..... 174

DESIGN PRINCIPLES, STEEL ..... 175

Objective ..... 175

References ..... 175

Principles of structural analysis ..... 175

Simplified calculation method ..... 175

Direct calculation of stresses and strains ..... 175

Assumptions ..... 175

Assumptions regarding local vs. global strength and stiffness ..... 175

Hierarchy of the load carrying elements ..... 176

Global strength and stiffness ..... 177

Structural arrangement ..... 177

Displacement craft, design category D ..... 177

Planing craft ..... 177

Support for longitudinal stiffeners ..... 177

Keels, stem and chines ..... 177

Torsional stiffness and -strength ..... 177

Superstructure support points ..... 178

Hull stiffeners ..... 178

Continuity and termination of stiffeners ..... 178

Straightness and local discontinuities of stiffeners ..... 178

Safety against buckling ..... 178

Transverse stiffeners ..... 178

Floating stiffeners ..... 178

Other stiffeners ..... 178
Construction details ..... 179
Joining plates of different thickness ..... 179
Fastening and joints of stiffeners ..... 179
Openings in load-bearing structures ..... 179
Sharp edges ..... 180
Other details ..... 180
Corrosion ..... 180
Welding ..... 180
STEEL MATERIALS ..... 184
Normal strength steel ..... 184
Steel grades for low temperatures ..... 184
SCANTLINGS DETERMINATION, STEEL ..... 185
Objective ..... 185
References ..... 185
Documentation ..... 185
List of symbols ..... 185
Dimension of panels ..... 186
Scantlings requirements, steel panels ..... 186
Correction factors for panels ..... 187
Correction for alloy strength ..... 187
Correction based on panel curvature ..... 187
Correction based on panel aspect ratio. ..... 188
Stiffeners ..... 189
Section modulus ..... 189
Effective flange ..... 190
Shear area of stiffener webs ..... 190
Reinforcements ..... 190

Highly loaded structures ..... 191
Engine foundations ..... 191
Transoms for outboard and sterndrive engines ..... 191
Attachment of mooring and other highly loaded fittings ..... 191
Attachment of railings, handholds and lifeline hooking points ..... 191
Attachment of RIB-pontoon ..... 191
Design stresses ..... 192
PRODUCTION OF STEEL BOATS ..... 193
Objective ..... 193
References ..... 193
Documentation ..... 193
Workshop conditions ..... 193
Materials ..... 194
Cutting and forming ..... 194
Welding ..... 194
Welder's qualification ..... 194
Welding Procedure Specification ..... 194
Surveys ..... 194
Required weld quality ..... 195
RUDDER AND STEERING SYSTEMS ..... 196
Objective ..... 196
References ..... 196
Documentation ..... 196
Steering arrangements ..... 197
Main steering system ..... 197
Emergency steering system ..... 197
Requirements for steering systems ..... 197
Rudders ..... 198

Rudder design, general ..... 198

Fail-safe design ..... 198

Rudder dimensioning load ..... 200

Spade rudder bending moment and bearing loads ..... 200

Bending moment and bearing loads for rudders supported at their lower end ..... 201

Rudder stock diameter ..... 202

Rudder bearings ..... 202

Rudder blade ..... 202

Plate and profiled rudders ..... 203

Tillers and quadrants ..... 203

Upper end of rudder stock casing ..... 204

Rudder sole piece ..... 204

Rudder stock flange bolted connections ..... 204

Steering system forces ..... 205

PROPULSION MACHINERY ..... 206

Objective ..... 206

References ..... 206

Documentation ..... 206

Application ..... 206

Engines ..... 207

Propulsion engine types ..... 207

Portable auxiliaries ..... 207

Power ratings ..... 207

Redundancy ..... 207

Rolling and pitching ..... 208

Hot surfaces ..... 208

Power transmission ..... 208

Engine spaces ..... 208

Arrangements ..... 208

Installation of outboard engines ..... 208

Cooling systems ..... 209

General ..... 209

Cooling systems with sea water intake ..... 209

Cooling system details ..... 210

Exhaust system ..... 210

General ..... 210

Prevention of water intrusion ..... 210

Insulation ..... 211

Engine space ventilation ..... 211

Material requirements for the exhaust system ..... 212

Control and information systems ..... 212

Pressure equipment ..... 212

Tanks ..... 212

Strength ..... 212

Tank materials ..... 213

FUEL SYSTEM ..... 214

Purpose ..... 214

References ..... 214

Documentation ..... 214

Design of fuel systems ..... 215

Requirements for spaces containing fuel tanks ..... 215

Fuel tanks ..... 216

Fuel tank arrangements ..... 216

Materials ..... 216

Fuel tank construction ..... 217

Tank seatings and attachments ..... 218

Testing of fuel tanks ..... 218

Marking of fuel tanks ..... 219

Fuel system installation ..... 219

Fuel system piping ..... 219

Testing ..... 220

Pressure testing of the system ..... 220

Fire testing ..... 221

POWER TRANSMISSION ..... 222

Objective ..... 222

References ..... 222

Documentation ..... 222

General requirements ..... 222

Engine bearers ..... 222

Gearboxes ..... 223

Requirements for shafting with propeller ..... 223

Propeller shaft ..... 223

Flexible shaft couplings and constant velocity joints ..... 224

Thrust bearings including bearers ..... 224

Propeller shaft seals ..... 224

Propeller shaft struts ..... 225

Propeller shaft bearings ..... 225

Bearing spacing ..... 225

Requirements for waterjets ..... 226

ELECTRICAL INSTALLATION ..... 227

Objective ..... 227

References ..... 227

Documentation ..... 227

Definitions ..... 228

Main electric source, secondary electric source, and emergency electric source ..... 228

Essential consumers ..... 228

Main voltage ..... 229

Small installations, definition ..... 229

Easily accessible ..... 229

Application ..... 229

Electrical installations ..... 229

Small installations, alternative standards ..... 229

Electrical propulsion ..... 229

General ..... 230

Selection, planning, dimensioning, and installation ..... 230

Propulsion machinery starting circuit ..... 230

Distribution network ..... 230

Electrical generation on board ..... 230

The main electric source ..... 230

The secondary electric source ..... 231

The emergency electric source ..... 231

Batteries and battery banks ..... 231

General ..... 231

Battery capacities ..... 231

Battery ventilation ..... 232

Protection against engine room fire and flooding ..... 232

Attachment of battery installation ..... 232

Generators and chargers ..... 232

Charging capacity ..... 232

Degree of protection for the equipment ..... 233

Testing ..... 233

INTERIOR ..... 234

Objective ..... 234
References ..... 234
Documentation ..... 234
Toilets ..... 234
Ventilation ..... 234
Fresh water systems ..... 235
PERSONAL SAFETY ..... 236
Objective ..... 236
References ..... 236
Documentation ..... 236
Working deck ..... 236
Definition ..... 236
Accessibility ..... 236
Minimum width of working deck ..... 236
Working deck continuity ..... 237
Prevention of falling overboard ..... 237
Slip resistant deck areas ..... 237
Foot-stops ..... 238
Handholds on working decks ..... 238
Guard-rails, bulwarks and guard-lines ..... 238
Seats ..... 238
Handholds in high speed craft ..... 239
Body support in high speed craft ..... 239
Emergency stop ..... 240
Means of reboarding ..... 240
Minimizing the risk of injury on board ..... 240
Doors and passageways ..... 240
Sharp edges ..... 240

Securing of heavy objects ..... 240

Hot surfaces ..... 240

Rotating machinery ..... 241

Falling and loosing balance ..... 241

Emergency routes and emergency exits ..... 241

Open living quarters ..... 241

Closed living quarters ..... 241

Emergency exits ..... 242

Objective ..... 243

References ..... 243

Documentation ..... 243

Definitions ..... 244

Fire resisting divisions ..... 244

Fire resisting materials ..... 244

Non-combustible material ..... 244

Steel or other equivalent material ..... 244

Low flame-spread ..... 244

Fire detection and alarm ..... 245

Fire alarm ..... 245

Firefighting ..... 245

General arrangements ..... 245

Escape ways and emergency exits ..... 245

Cooking and heating appliances ..... 245

LPG gas installations ..... 246

Ignition protection ..... 246

Requirements for material and arrangements ..... 246

General ..... 246

Fire resisting divisions (for length of hull over 15 m) ..... 246

Restrictions to the use of burning materials (for length of hull over 15 m) ..... 247

Exhaust piping ..... 247

Ventilation control ..... 247

General (for length of hull over 15 m) ..... 247

Ventilation fan controls ..... 247

Fire damper controls (for length of hull over 8 m) ..... 248

Deck penetrations (for length of hull over 15 m) ..... 248

Fire detection- and alarm systems ..... 248

General ..... 248

Areas to be protected (for length of hull over 15 m) ..... 248

Requirements for the system ..... 248

Installation requirements ..... 249

Fire-extinguishing systems – general ..... 249

Fixed fire-extinguishing systems ..... 249

Fixed fire-extinguishing system control ..... 249

The amount of extinguishing agent ..... 250

Pressure vessels and tubing ..... 250

Portable extinguishers ..... 250

Location and type ..... 250

Number ..... 251

Fire pumps, waterpipes, hydrants and hoses (for length of hull over 15 m) ..... 251

Miscellaneous ..... 252

Doors and hatches in fire protected spaces ..... 252

Fire protection plan (for length of hull over 15 m) ..... 252

ANCHORING, MOORING AND TOWING ..... 253

Objective ..... 253

References ..... 253

Documentation ..... 253

Mooring equipment ..... 253

Anchoring equipment ..... 254

Towing ..... 255

MAIN HELM POSITION ARRANGEMENTS AND NAVIGATION LIGHTS ..... 256

Objective ..... 256

References ..... 256

Documentation ..... 256

Visibility at the main helm position ..... 256

General ..... 256

Horizontal field of visibility ..... 257

Vertical field of visibility ..... 257

Requirements ..... 257

Illumination ..... 259

Windows ..... 259

Control equipment ..... 259

Navigation lights ..... 260

HANDLING CHARACTERISTICS AND DETERMINATION OF ENGINE POWER ..... 261

Objective ..... 261

References ..... 261

Documentation ..... 261

Requirements ..... 261

Assessment ..... 262

Loading and weather conditions ..... 262

Keeping a straight course ..... 262

Alternating turns at full speed (zig-zag-test) ..... 263

Avoidance test at high speed ..... 263

Crash stop ..... 264

Going astern ..... 264

Emergency steering ..... 264

ACCESSIBILITY AND MAINTENANCE ..... 265

Objective ..... 265

References ..... 265

Documentation ..... 265

Definitions ..... 265

Requirements for accessibility and maintenance ..... 266

Clarification of some of the requirements ..... 267

Doorways and hatchways ..... 267

Anchoring equipment ..... 267

Engine systems ..... 267

Shut-off valves for seacocks ..... 267

Steering gear ..... 267

Emergency steering ..... 267

Electrical systems ..... 268

PREVENTION OF POLLUTION AND NOISE ..... 269

Objective ..... 269

References ..... 269

Noise on board the craft ..... 269

Test method ..... 269

Test report ..... 270

Allowable LpA values ..... 270

Pass-by noise ..... 270

Objective ..... 270

Test method ..... 271

Allowable acoustic pressure levels $L_{pASmax}$ values ..... 271

Toilet waste ..... 271

General ..... 271

Installation of a holding tank for waste water ..... 272

Hull penetrations ..... 272

Deck fittings for suction drainage ..... 272

Prevention of fuel or lubrication oil leakage ..... 272

General ..... 272

Alternatives for arranging bilge water removal from the engine room ..... 272

ADDITIONAL NOTATION “TRANSPORT OF CARGO” ..... 273

Objective ..... 273

Additional notation “Transport of cargo” ..... 273

Documentation ..... 273

Requirements ..... 273

General arrangement ..... 273

Load line mark ..... 273

Load distribution ..... 274

Lashing of cargo ..... 274

Stability with shifting deck cargo ..... 274

Stability with other types of cargo ..... 274

ADDITIONAL NOTATION “PASSENGER TRANSPORT” ..... 275

Objective ..... 275

Additional Notation *”Passenger Transport”* ..... 275

References ..... 275

Documentation ..... 275

Scope of application ..... 275

General requirements ..... 275

Stability ..... 275

Subdivision and water draining arrangements ..... 276

Fire safety ..... 276

Personal safety ..... 276

Passenger spaces and escapeways ..... 277
Accommodation ..... 278
Electrical system ..... 278
Propulsion machinery ..... 278
Fuel system ..... 278
Prevention of pollution and noise ..... 279
ADDITIONAL NOTATION TOWING ..... 280
Objective ..... 280
Additional Notation ”Towing” ..... 280
Documentation ..... 280
Stability requirements ..... 280
Heeling moment ..... 280
Special requirements ..... 281
Towing hawser ..... 281
Visibility from the helm station ..... 281
ADDITIONAL NOTATION “OIL SPILL COMBAT” ..... 282
Objective ..... 282
Additional Notation ”Oil Spill Combat” ..... 282
References ..... 282
Documentation ..... 282
Scope of application ..... 282
Unsafe and safe areas ..... 283
Unsafe areas ..... 283
Safe areas ..... 283
External surface materials ..... 283
Isolation of unsafe and safe areas ..... 283
Storage tanks for recovered oil ..... 283
Arrangement ..... 283

Tank openings ..... 283
Tank vents ..... 284
Pumping systems ..... 284
Engine installation ..... 284
Arrangements ..... 284
Cooling system ..... 284
Exhaust systems ..... 284
Ventilation of accommodation spaces ..... 284
Gas detection system ..... 284
Electrical equipment ..... 284
Certified equipment ..... 284
Uncertified electrical equipment ..... 285
Oil recovery equipment ..... 285
ADDITIONAL NOTATION “SELF-RIGHTING” ..... 286
Objective ..... 286
Additional Notation ”Self-righting” ..... 286
Documentation ..... 286
Stability ..... 286
Propulsion engine and its systems ..... 286
Strength of superstructures ..... 286
Heavy equipment and objects ..... 287
Seating ..... 287
Operational capability after capsizing and returning to upright ..... 287
ADDITIONAL NOTATION “ONE COMPARTMENT DAMAGE STABILITY” ..... 288
Objective ..... 288
Additional Notation ”One compartment damage stability” ..... 288
References ..... 288
Documentation ..... 288

Definitions ..... 289
General ..... 289
Compartment ..... 289
Bulkhead deck ..... 289
Margin line ..... 289
Space permeability ..... 289
Watertight doors and hatches ..... 289
Initial condition ..... 289
Damage condition ..... 289
Assumptions for the craft subdivision ..... 290
Extent of damage ..... 290
Length of damage ..... 290
Bottom damage ..... 290
Side damage ..... 291
Permeability coefficients for damaged compartments ..... 291
Flotation equilibrium position after damage ..... 291
Heeling moment ..... 292
Offset load moment ..... 292
Wind induced moment ..... 292
Alternative to the use of the margin line ..... 292
Stability after the damage ..... 292
ADDITIONAL NOTATION “ICE REINFORCEMENT” ..... 294
Objective ..... 294
References ..... 294
Symbols ..... 294
Documentation ..... 294
Definitions ..... 295
Ice conditions ..... 295

Ice zone ..... 295

Ice frame ..... 296

Ice stringer ..... 296

Scope of application ..... 296

Hull type ..... 296

Hull shape and appendages ..... 296

Propulsion and cooling system ..... 296

Navigation speed ..... 296

Hull material ..... 297

Ice load ..... 297

The nature of ice load ..... 297

Ice load per contact surface unit length ..... 298

Correction of the load based on contact surface length ..... 300

Ice pressure ..... 301

Structure ..... 301

Structural arrangements in the ice zone ..... 301

Reinforced areas ..... 302

Keel and stem ..... 302

Sharp chines ..... 303

Hull shell ..... 303

Frames ..... 304

Propeller shaft ..... 305

Consideration of side accelerations ..... 305

Reduction and reverse gear ..... 305

Rudder and steering system ..... 306

Icing on deck and superstructures ..... 306

ADDITIONAL NOTATION “DECK CRANE” ..... 307

Objective ..... 307

Additional Notation “Deck Crane” ..... 307

Scope of application ..... 307

Prevention of overload ..... 307

Restrictions ..... 307

Stability ..... 307

Maximum allowed load ..... 307

Documentation of the strength ..... 308

The strength of the crane ..... 308

The strength of the lifting device attachment ..... 308

ADDITIONAL NOTATION HOVERCRAFT ..... 309

Objective ..... 309

Additional Notation ”Hovercraft” ..... 309

References ..... 309

Documentation ..... 309

Scope of application ..... 309

General requirements ..... 309

Environmental conditions ..... 309

Stability and flotation ..... 310

Structure ..... 310

Scantlings ..... 310

Operation on ice ..... 310

Operation on land ..... 310

Propulsion machinery ..... 311

General ..... 311

Cooling system ..... 311

Personal safety ..... 311

Air propeller protection ..... 311

Fire safety ..... 312

Handling characteristics ..... 313

Air cushion supported ..... 313

Without air cushion..... 313

Noise ..... 313

User Manual..... 1

# 1 INTRODUCTION AND PRINCIPLES OF APPLICATION

## 1.1 Objective

The objective of these Rules is to assess the safety and environmental sustainability for *Commercial Craft.*

In this chapter the Rule principles are described, and some Rule concepts defined.

## 1.2 Background

These Rules have been developed using the Nordic Boat Standard for Commercial Craft 1990 (NBS-Y 1990) as a framework, as well as the International Standards developed within the ISO TC 188 workgroup.

For boats in the upper range between hull length 15 m to 24 m Load Line length, the requirements are adapted to "ship rules" where practicable.

## 1.3 Principles when using ISO-standards

The ISO-standards referred to are mainly developed for CE-certification of boats according to the directive 2013/53/EU (the Recreational Craft Directive). The scope of these standards is for "small craft" up to 24 m hull length and as such not restricted to recreational craft only. The principles used in these standards are often relevant to commercial craft as well, even though the required level for them in the standards in some instances is too low.

The ISO standards are implemented as follows:

- The Rules text is to a large extent based on ISO-standards. Often the requirement level is, however, higher than in the corresponding ISO-standards. At the beginning of each chapter, in the section References, the applicable ISO-standards for the chapter are listed.
    - These Rules deal with the most common cases, for special cases reference is made to ISO-standards.
    - The Rules text primarily refers for Commercial Craft. In the Rule chapters where reference is made to ISO-standards, additionally the applicable parts of the standards refer. In view of this the Rule user should also have access to the standards referred to.
    - It is the intention that these Rules will be updated regularly in line with the latest version of the referenced ISO-standards.

## 1.4 The Rules vs. International Conventions

To avoid large differences in safety level at the 24 m length limit (Load Line length), the International Conventions that apply to ships are taken into account when considered practical for achieving the intended purpose here.

Of the four design categories that are referred to in these Rules, the most severe, Category A, is intended for extended voyages, but shall not be regarded as unrestricted service in the same sense as in the International Conventions. Therefore, the requirements for Category A craft are in many cases lower than those given in the conventions.

## 1.5 Unusual arrangements

These Rules are, by their very nature, purely technical. The Rule requirements are primarily aimed at achieving sufficient structural integrity as well as environmental sustainability.

At the beginning of each chapter, there is a paragraph named ”Objective”, where the risks that the Rule requirements attempt to cover are described.

In such cases where the unusual arrangement is not in conformity with the intention of these Commercial Craft Rules as applied, or these Rules do not cover the particular arrangement, the case shall be described with sufficient accuracy in the inspection report, enabling TraFi to make a decision.

## 1.6 Scope of the Rules

### 1.6.1 Scope

The Rules are intended to enable the structural integrity and environmental sustainability of the craft to be evaluated. Portable safety- and other equipment is not covered by the Rules. Also communication and navigation electronics are outside the scope.

### 1.6.2 Length of the craft

The Rules apply to commercial craft with a hull length, according to the International Standard ISO 8666, greater than 5.5 m, and a length according to the International Load Line Convention (ILLC), of less than 24 m. The Load Line length is taken as the greater of:

- 96% of the length of the hull measured at a height equal to 85% of the depth (depth of hull from the top of the keel to the weather deck amidships), or
- the horizontal distance from the forward perpendicular (intersection of stem and 85% height waterline) to the rudderpost at the same height.

### 1.6.3 Types of craft

These Rules shall apply primarily to self-propelled surface craft. The Rules can be applied also to surface vessels without propulsion (barges etc.). Further the Rules can be applied according to Chapter 41 to hovercraft. The Rules do not apply to sailing craft, hydrocopters, nor hydrofoil craft.

### 1.6.4 Hull construction materials

Fiber-reinforced plastics, aluminium and steel construction are covered in these Rules. The use of other materials needs to be agreed with TraFi.

### 1.6.5 The definitions “Under Way” and “At Sea”

The craft is under way when proceeding using its own propulsion.

A craft at sea does not necessarily move, but can also be stationary held by an anchor or some other means.

## 1.7 Conditions of use

### 1.7.1 Design Categories

A boat given Design Category A is considered to be designed to operate in winds up to Beaufort Force 10 and associated wave heights, and to survive in even worse conditions. Such conditions may be encountered on extended voyages, for example across oceans, or inshore when unsheltered from the wind and waves for several hundred nautical miles. Winds are assumed to gust to 28 m/s.

A boat given design category B is considered to be designed for up to 4 m significant wave height and winds up to Beaufort Force 8. Such conditions may be encountered on offshore voyages of sufficient length or near coasts where shelter may not always be immediately available. Winds are assumed to gust to 21 m/s.

A boat given design category C is considered to be designed for up to 2 m significant wave height and winds up to Beaufort Force 6. Such conditions may be encountered on exposed inland waters, in estuaries and coastal waters in moderate weather conditions. Winds are assumed to gust to 17 m/s.

A boat given design category D is considered to be designed for 0.3 m significant wave height where some waves may reach 0.5 m, and typical steady winds up to Beaufort Force 4. Such conditions may be encountered on sheltered inland waters and in coastal waters in good weather. Winds are assumed to gust to 13 m/s.

Table 1.1 — Summary of Design Category definitions

| Design Category | A | B | C | D |
|---|---|---|---|---|
| Wave height up to | approx. 7 m significant | 4 m significant | 2 m significant | 0.3 m significant<br>0.5 m max |
| Typical Beaufort wind force | up to 10 | up to 8 | up to 6 | up to 4 |

The significant wave height is the mean height of the highest one-third of the waves, which approximately corresponds to the wave height estimated by an experienced observer. Some waves will be close to double this height.

### 1.7.2 Temperatures and water salinity

All the materials used in the craft shall stand storing in the temperature range -40...+60 °C. It shall be possible to use the craft and its systems in the temperature range -10...+50 °C.

All the materials getting into contact with sea water shall stand 5 % salinity.

## 1.8 Additional Notations

All craft shall meet the requirements in Chapters 1-32, provided they are relevant. The assessment can be extended to cover particular additional features related to the craft's special missions. Provided the special mission remains within the Rules and the craft meets the requirements, an Additional Notation can be given in the Certificate of Approval. The following Additional Notations are included in the Rules:

### 1.8.1 Cargo Transport

The Additional Notation is given to craft with a payload exceeding (2.5·LWL· BWL) ·1.5 kg. Special attention to be paid to the handling, distribution and lashing of cargo. The stability is to be sufficient for the amount and type of cargo.

### 1.8.2 Towing

The Additional Notation is given to craft engaged in the towing of floating objects or other vessels. Special attention to be paid to stability and prevention of water intrusion, as well as safety on deck particularly around the towing hook.

### 1.8.3 Oil Spill Combat

The Additional Notation is given to craft intended for collecting oil spill from the sea or shores and/or transport of the oil spill to the shore or to other vessels. The craft shall be able to operate in an

environment containing explosive gases. Special attention is also paid to hazards involved when operating outside fairways, safety on deck and fire suppression.

### 1.8.4 Passenger Transport

The Additional Notation is given to craft transporting more than 12 passengers, which are not part of the crew. Special attention to be paid to the passenger spaces arrangement and its fast evacuation, location of life saving appliances, and fire suppression.

Craft with the Additional Notation *Passenger Transport* can be examined for transfer to Passenger Vessel.

### 1.8.5 Self-Righting

The Additional Notation is given to craft having positive stability in the heeling angle range 0...180 degrees in all relevant loading conditions. The engines and other systems shall be arranged so the craft is in working order after returning to the upright condition.

### 1.8.6 One Compartment Damage Stability

The Additional Notation is given to craft having an equilibrium flotation position and stability meeting the requirements in Chapter 38 with one compartment damaged.

### 1.8.7 Winter navigation

The Additional Notation is given to craft able to operate in ice and sub-zero conditions. Special attention to be paid in addition to the scantlings and also to the hull shape, the rudder, and the propulsion arrangements. Additionally, the stability assessment needs to consider icing on decks and superstructures.

### 1.8.8 Deck Crane

The Additional Notation is given to craft having a deck crane. Special attention to be given to the crane attachment as well as the stability while it is in use.

### 1.8.9 Hovercraft

The Additional Notation is given to hovercraft. The notation is valid while the craft operates in the air-born mode. In displacement mode the craft shall meet the requirements in Chapters 1-32 with the exceptions mentioned in the Rule.

## 1.9 Procedures for assessment

### 1.9.1 Craft identification

For identification purposes each craft shall have a CIN-code, yard number, or other permanent hull marking, which can be referred to in the documentation of the craft

### 1.9.2 Individual approval

Normally, compliance with these Rules is individually assessed for each craft. This means that each craft has to be surveyed.

### 1.9.3 Sisterships

If the craft to be surveyed is the sistership of a previously approved craft, the report can refer to the earlier made survey for those parts of the craft which are identical with the previous one

### 1.9.4 Type approval plus production control

For series-built craft type approval can be granted. If this option is chosen, the documentation and production control are to be sufficiently comprehensive to facilitate the manufacturing of identical products.

The documentation shall comprise the survey reports listed under 1.10 Documentation for each Chapter, if applicable.

## 1.10 Documentation

The manufacturer or his representative shall provide the required information to the assessing authority.

The extent of the documentation depends on the type of craft. The following documents are always required:

- An application mentioning the craft identification marking, the intended Design Category, and possible Additional Notation;
- The craft main particulars and other general information;
- General Arrangement drawing.

In addition to this it is necessary to submit the required additional information listed at the beginning of each Chapter.

## 1.11 Reporting

The result of the assessment is presented in the Survey Report, and confirmed by the Surveyor with his signature. The Survey Report shall contain at least the following information:

1. The name of the Survey Report, containing the name of the craft;

2. The client contact information;
3. The craft identification marking;
4. Specification for the craft containing the following:
   - Design Category;
   - Additional Notation;
   - Hull information;
   - Engine and propulsion gear information;
   - Lightweight and deadweight;
   - Essential equipment;
5. A list of drawings, test protocols, calculations and other documents according to the Document list at the beginning of each applicable Chapter, as referred to in the Survey Report. The mentioned documents shall be identifiable with a numerical code and/or headline and date, and they must be filed together with the Report;
6. The input data for the inspections, tests, and calculations, the methods used as well as the results and possible deviations;
7. A statement containing at least the following information:
   - The craft identification marking;
   - Design Category;
   - Possible Additional Notation;
   - Maximum number of persons;
   - Maximum load;
   - Possible restrictions to the use of the craft;
   - Propulsion engine number and power;
   - Type of propulsion, statement that the craft meets the Rules, and, if applicable, the limitations
   - Signatory Authority;

## 1.12 Symbols and units commonly used in these Rules

### 1.12.1 The weight and dimensions of crew

In the loading conditions defined for freeboard- and stability calculations, as well as for other Rule purposes, the following weights and dimensions are to be used, unless the crew uses special equipment (for example diving gear) requiring increased weight and dimensions:

- mass 85 kg
- width of seat 0.5 m
- height above seat 0.9 m
- horizontal dimension from backrest to foot support 0.75 m; and
- vertical position of centre of gravity above seat or deck 0.1 m.

For craft with the Additional Marking ”Passenger Transport” the passenger weight and dimensions differ from the above, and are given in Chapter 34.

### 1.12.2 Symbols

Table 1.2.: List of symbols

| Symbol | Unit | Meaning | Standard reference |
|---|---|---|---|
| $L_H$ | m | Length of hull | ISO 8666 |
| $L_{WL}$ | m | Length of waterline in loading condition LC2 | ISO 8666 |
| $T_{MAX}$ | m | Draught in loading condition LC2 | |
| $B_H$ | m | Beam of hull in loading condition LC2 | ISO 8666 |
| $B_{WL}$ | m | Beam waterline in loading condition LC2. For multihulls, the sum of the waterline beam for each hull. | ISO 8666 |
| $B_C$ | m | Chine beam | ISO 8666 |
| $F_M$ | m | Freeboard amidships in the actual loading condition | ISO 8666 |
| $T_C$ | m | Draught of canoe body in the actual loading condition | ISO 8666 |
| Δ | t | Displacement tonnes in the actual loading condition | |
| $V_D$ | $m^3$ | Displacement volume in the actual loading condition | ISO 12217 |
| ø | degree (°) | Angle of heel | ISO 12217 |
| *CL* | | Crew limit = maximum number of persons on board | ISO 12217 |
| *GM* | m | Transverse metacentric height | ISO 12217 |
| *GZ* | m | Righting lever | ISO 12217 |
| *LCG* | m | Longitudinal position of the centre of gravity | ISO 12217 |
| *VCG* | m | Vertical position of the centre of gravity | ISO 12217 |
| *LC1* | - | Loading condition “Light service condition” | |
| *LC2* | - | Loading condition ”Fully loaded departure” | |
| *LC3* | - | Loading condition ”Fully loaded arrival” | |
| *OFFSET* | - | Load offset from centreline | |
| $m_{LC}$ | kg | Light ship mass | ISO 12217 |
| $m_{MO}$ | kg | Displacement mass in Light service condition (LC1) | ISO 12217 |

| | | | |
|---|---|---|---|
| $m_{LDC}$ | kg | Displacement mass in Fully loaded departure condition(LC2) | ISO 12217 |
| $m_{LA}$ | kg | Displacement mass in Fully loaded arrival condition (LC3) | |
| $m_L$ | kg | Mass of the maximum load | ISO 12217 |
| *RM* | Nm | Righting moment | ISO 12217 |
| *GM* | m | Transverse metacentric height including free surface corr. | |
| *GZ* | m | Righting lever including free surface correction | |
| *V* | kn<br>m/s | Speed at displacement $m_{LDC}$ | ISO 12215 |
| $V_{MAX}$ | kn<br>m/s | Maximum speed | |
| $A_{LV}$ | $m^2$ | Wind load area in the actual loading condition | ISO 12217 |

# 2 CRAFT CONCEPTS

## 2.1 Objective

The objective in this chapter is to define different types of craft concepts with regard to decking and weathertight protection as well as prevention of downflooding. Craft concepts are used within the Rules to assist in applying the requirements in a fair way.

## 2.2 References

- In this Chapter reference is made to the following documents:
- ISO 12217-1:2015 Small craft - Stability and buoyancy assessment and categorization
- ISO 6185-3:2014 Boats with a hull length less than 8 m with a motor rating of 15 kW and greater
- ISO 6185-4:2011+Corr.2014 Boats with a hull length less than 8 m with a motor rating of 15 kW and greater
- ISO 11812:2001 Small craft - Watertight cockpits and quick-draining cockpits
- ISO 12216:2002 Small craft - Windows, portlights and hatches, deadlights and doors - Strength and water tightness

## 2.3 Selection of craft concepts

The Rule requirements are in many cases defined considering the general arrangement of the craft. The decking arrangement, its weather tightness and water drainage is frequently referred to. The Rules assume that the craft will fit into one of the concepts 2.3.1-2.3.4 below. The selection uses the principles presented in the international standards ISO 12217 and ISO 6185.

### 2.3.1 Fully enclosed craft

For fully enclosed craft the horizontal projection comprises the following components in any combination:

- watertight deck and superstructure;
- quick-draining recesses complying with Chapter 5, their influence on the stability meeting the requirements in Chapter 4;
- watertight recesses complying with Chapter 5 with a combined volume V not greater than:
- $V \leq \frac{L_H \cdot B_H \cdot F_M}{40}$ [m$^3$] (2.1)
- closing appliances complying with Chapter 3.

The surface comprising the sum of the parts listed above is defined as the Weather Deck. The strength of the parts comprising the weather deck shall meet the requirements in Chapter 10 (FRP), 14 (aluminium) or 18 (steel),

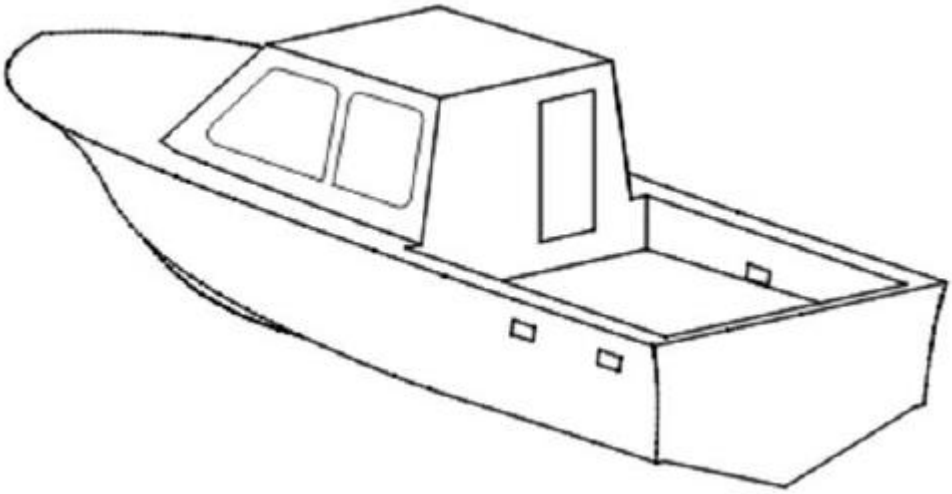

Figure 2.1.: Fully Enclosed craft.

Features of a Fully Enclosed craft:

- Deck arrangement ensures green water coming on board can drain quickly overboard;
- The water draining from the recesses does not endanger the stability;
- Quickly draining recesses;
- Strong and tight decks and superstructures:
- Strong and tight windows and hatches;
- Sufficient buoyancy reserve;
- Adequate bow height;
- Weather tight doors with sills

### 2.3.2 Partially protected craft

A craft in which at least one-third of the horizontal projection consists of weather tight decking, superstructure, or other rigid covers that are designed to shed water overboard immediately. Included into this area to be all surfaces within LH/3 from the bow, and also the area 100 mm inboard from the periphery of the boat. The remaining part may be open.

Doors, windows, and hatches need to comply with the requirements in Chapter 3 only if they are located within the mentioned LH /3 decking.

The strength of the decking or covering shall meet the requirements in Chapter 10, 14 or 18, depending on the structural material used. Quick draining recesses shall meet the requirements in Chapter 5, their closing appliances the requirements in Chapter 3.

In addition, the loaded displacement mass of partially protected craft shall not exceed

$$m_{LDC} \leq (11 \cdot L_H \cdot B_H)^{1.5} \text{ [kg]} \qquad (2.2)$$

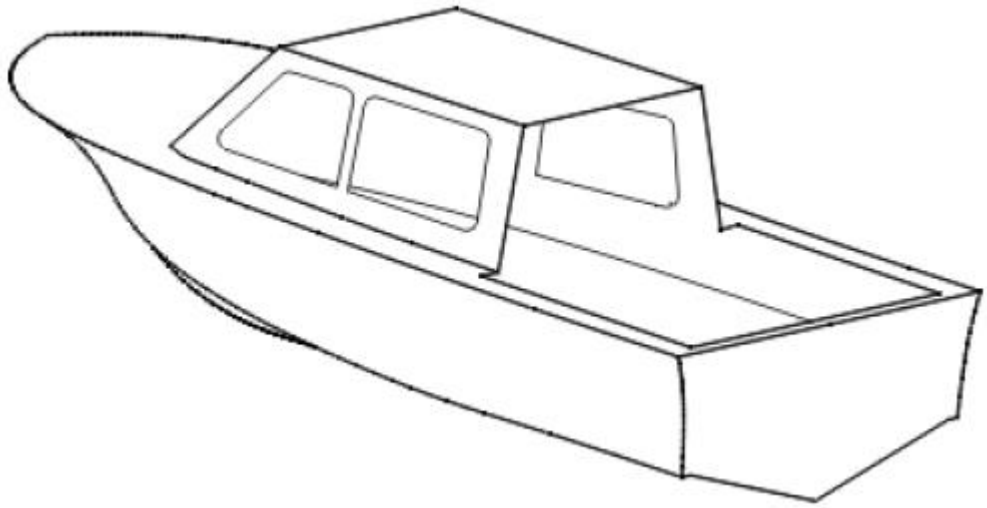

Figure 2.2.: Partially protected craft

The hull sides up to the lowest downflooding point are considered as reserve buoyancy. For a partially protected craft the highest Design Category is C (coastal), assuming that dangerous amounts of big waves are not coming on board. It is assumed, that spray water is emptied from the open space by drain pumps.

### 2.3.3 Craft with buoyancy chambers for remaining afloat

Within this concept a large part of the total volume consists of closed, fully watertight buoyancy chambers. These chambers must meet the requirements for floats, and the craft shall with the aid of the chambers remain afloat when filled with water according to Chapter 4.

In the craft concept it is assumed that in fully loaded condition all spaces except the closed buoyancy chambers are filled with green water coming onboard, and still sufficient reserve buoyancy must remain.

Generally commercially used craft with buoyancy chambers are hard-bottomed RIBs (Rigid Inflatable Boats). For them at least half of the necessary volume consists of fiber reinforced polymer skin tubes or pontoons, keeping their shape due to internal pressure. The rigid bottom is of FRP, aluminium, or a similar structural material. The pontoon material shall meet the requirements in the standard ISO 15372, the buoyancy arrangements to meet ISO 6185, and the bottom construction the requirements for the chosen material in Chapters 10, 14, or 18.

Craft with buoyancy chambers may also have rigid air filled, or foam filled floats.

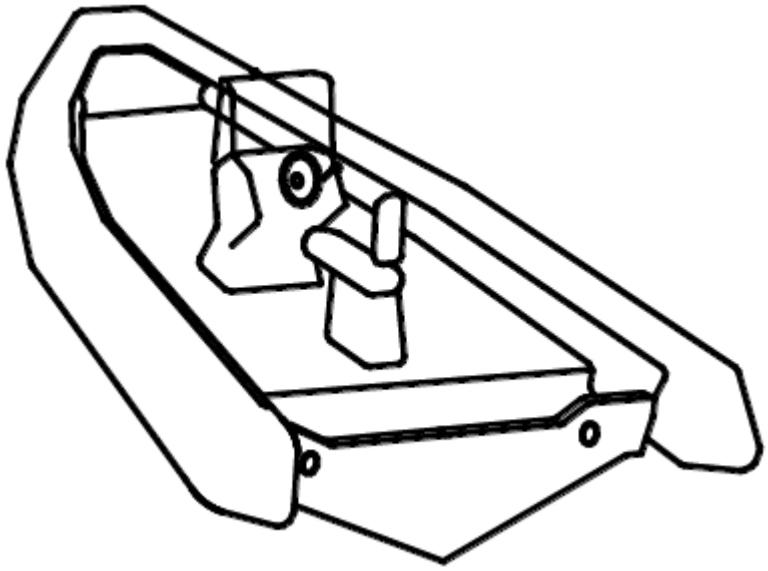

Figure 2.3.: Craft with buoyancy chambers

### 2.3.4 Open craft without buoyancy chambers

Craft which do not meet the requirements for fully or partially enclosed craft, and do not have buoyancy chambers, are considered open craft. The assumption is that for these the reserve buoyancy comprises the watertight topsides, which must be continous up to the required freeboard height. If there is a deck and/or recesses, which are mainly above the waterline in the Minimum Operation Condition, and these may collect water and thereby reduce stability, the assessment is to proceed as follows:

- Freeboard- and stability requirements must be met assuming that the spaces above the waterline contain an amount of water corresponding to 25% of their volume; or
- The deck to be modified so the water collecting above the waterline is led swiftly to craft spaces below the waterline, and pumped overboard with a bilge pump.

For open craft there is a limit for the loaded displacement

$$m_{LDC} \leq (11 \cdot L_H \cdot B_H)^{1.5} \text{ [kg]} \qquad (2.3)$$

# 3 PREVENTION OF DOWNFLOODING

## 3.1 Objective

The objective in this chapter is to ensure a sufficient safety level against downflooding caused by improperly located and/or conceived openings or through-hull fittings

## 3.2 References

In this chapter reference is made to the following documents:

- ISO 12216:2002 Small craft - Windows, portlights, hatches, deadlights and doors – Strength and water tightness
- ISO 12217:2015 Small craft – Stability and buoyancy assessment and categorisation
- ISO 11812:2001 Small craft – Watertight cockpits and quick-draining cockpits
- ISO 9093-1:1994 Small craft – Seacocks and through-hull fittings – Part 1: Metallic
- ISO 9093-2:2002 Small craft –Seacocks and trough-hull fittings -- Part 2: Non-metallic
- International Load Line Convention 1966 with amendments

## 3.3 Documentation

For verifying that the requirements presented in this chapter are met, the following documentation is required:

- Location of openings (for instance on general arrangement drawing);
- Drawings of purpose-built closing appliances;
- Manufacturer and type designation of prefabricated closing appliances;
- Layout of seacocks and through-hull fittings; and
- Testing protocol of watertight integrity for closing appliances

## 3.4 Openings and closing appliances, general

### 3.4.1 Application

When applying the rules in this chapter it ahould be noted that the various types of deck arrangement (see Chapter 2) have different requirements for the water- and weather tight integrity. Only openings penetrating a surface requiring water- and weather tight integrity are subject to the requirements.

Note! The location of an opening may also be limited by freeboard and downflooding angle (see Chapter 4) . Further there may be special requirements for openings related to the Additional Notations of the craft, (see Chapters 33-42).

### 3.4.2 Exemptions

The requirements in this chapter may be disregarded for single openings on the following conditions:

- Stability- and freeboard requirements are met also when the space behind the opening is filled with water, and flooding into other compartments cannot occur.
- The craft important functions (see Chapter 24) are not affected although the space in question is filled with water.

## 3.5 Requirements for openings, and closing appliances

### 3.5.1 Properties affecting the requirements

The requirements for openings and their closing appliances are based on the following:

- Design Category;
- Type;
- Location;
- Closing status;
- Size;

The types of closing appliances are explained under 3.6. Definitions common to all types of appliances can be found under 3.9. A summary of the requirements for types of closing appliances are given in Tables 3.1-3.6 and detailed explanations for each type of closing appliance in the text under 3.10-3.17.

## 3.6 Definitions for types of openings, and closing appliances

The opening may be fitted with a closing appliance, which is a common term for devices protecting an opening, such as windows, doors, hatches, hull ports and thru-hull fittings.

### 3.6.1 Doorways

Doorways are approximately vertical openings equipped with closing appliances, enabling a nearly upright person to pass through.

### 3.6.2 Hatchways

Hatchways are openings with closing appliances, allowing access to the space behind them. A vertical hatchway allowing a nearly upright person to pass through, is a doorway.

### 3.6.3 Windows and portlights

Windows are glassed closing appliances, whose purpose is to pass light into the space where they are installed. Portlight is a small window with an area of maximum 0.16 m2. Windows and portlights may be

openable under particular conditions. An opening window may, depending on its purpose, also be a hatchway.

### 3.6.4 Hull ports

Hull ports are openings with closing appliances in the topside of open or partially protected craft.

### 3.6.5 Air pipes

Air pipes are small ventilation openings with maximum 50 cm2 cross section. Further they are equipped with a gooseneck or non-return valve, because of this they are considered weather tight when evaluating the stability. Examples of these are fuel tank and battery space vent pipes.

### 3.6.6 Through-hull fittings

Through-hull fittings are openings in the hull, connected to the craft's on-board systems. They may include a closing appliance (seacock).

### 3.6.7 Openings without closing appliances

Openings without closing appliances are openings that cannot be closed weather- or watertight without affecting the normal use of the craft. For example, the engine air intakes are such openings.

### 3.6.8 Local deck height HD

The vertical height in meters to the waterline in the fully loaded condition from the deck or similar surface, from which the edge height or sill is measured at the opening.

## 3.7 Application areas for openings

The following application areas are defined, see Figure 3.1:

- Application area 1 covers the topsides below the weather deck for fully enclosed craft, and to a height corresponding to the freeboard requirements for open and partially protected craft. For multihulls also the underside of the bridge ("wet deck") is included.
- Application area 2 covers the weather deck including superstructures up to the second deck (height h2) excluding nearly forward facing surfaces, which belong to Application area 3.
- Application area 3 covers the nearly forward facing vertical superstructure surfaces.
- Application area 4 covers the superstructure surfaces above the second deck excluding the nearly forward facing surfaces, which belong to Application area 3.

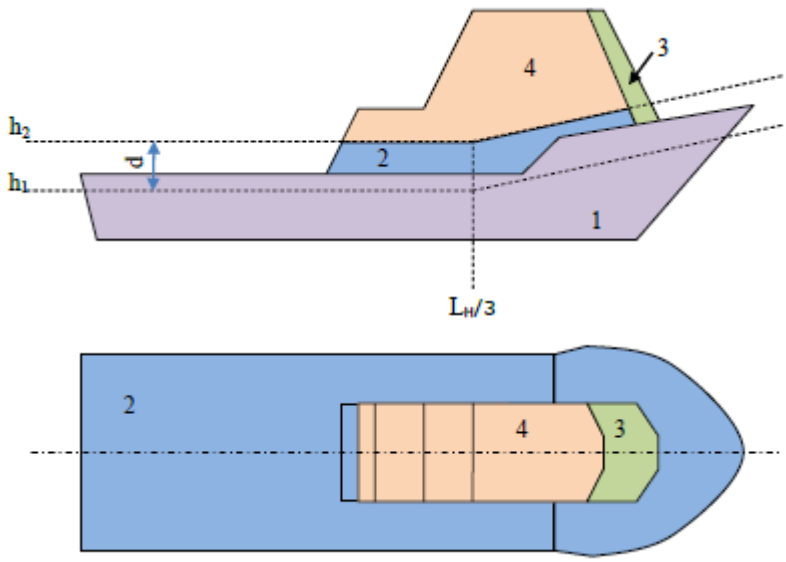


Figure 3.1: Location areas of openings

## 3.8 Opening's closing status in operation

The openings are divided into subsections based on their status when the craft is in operation:

- Always open at sea means that the opening in question must necessarily be open whenever the craft is in operation. Such openings are for example the engine air intakes.
- Temporarily open means that the opening in question may be open for short spells during operation, but they can quickly be closed weather- and watertight. Such openings are for example wheelhouse doors.
- Always closed at sea means that the opening in question is kept permanently closed weather- and watertight whenever the craft is in operation. Behind such openings are weather deck spaces not requiring access when the craft is in operation.

## 3.9 Definitions and requirements common for all closing appliances

### 3.9.1 Coaming- and sill heights

Openings shall be conceived for minimizing the possibility of water entering.

Openings always open at sea are not allowed in Application area 1 and below LH/15 in Design Categories A and B.

For fully enclosed craft the openings in the weather deck (see definition in Chapter 2) which are temporarily open at sea must have sills or coamings. Examples of such openings are:

- doorways leading to the craft interior
- hatchway/doorway leading to the engine space in Design Category A craft

The height of the coaming or sill for an opening is the least vertical height of its lower edge above the surface below it (deck, superstructure roof, etc.).

In Table 3.1. the coaming- and sill heights are given at the heights h1 and h2. The height h1 is calculated according to formula (3.1) and h2 according to formula (3.3):

$$h_1 = 0{,}7 \cdot k_{DC} \cdot k_L \cdot \frac{m_{LDC}}{1000 \cdot L_{WL} \cdot B_{WL}} \quad [m] \qquad (3.1)$$

Where $k_{DC}$ is:

- 1.0 for Design Category A
- 0.8 for Design Category B
- 0.75 for Design Category C
- 0.5 for Design Category D

$k_L$ is determined with formula (3.2) as a function of the longitudinal position (from aft end) X/LH

$k_L = 0.6 \cdot X/LH + 0.6$ min. 1.0 (3.2)

$h_2 = h_1 + d$ (3.3)

$d = k_{DC}\,(0.1 \cdot LH - 0.6)$ min. $0.9 \cdot kDC$ [m] (3.4)

If the local deck height is larger than $h_1$ but smaller than $h_2$, the sill- or coaming height is interpolated between them using Formula (3.5)

$$h_S = h_{S1} - \frac{(h_D - h_1)(h_{S1} - h_{S2})}{d} \quad [m] \qquad (3.5)$$

Where

$h_1$ see formula (3.1)

$h_D$ local deck height fully loaded, [m] see Figure 3.2

$h_{S1}$ sill height requirement at the level h1, [m], see Table 3.1

$h_{S2}$ sill height requirement at the level h2, [m], see Table 3.1

d see Formula (3.4)

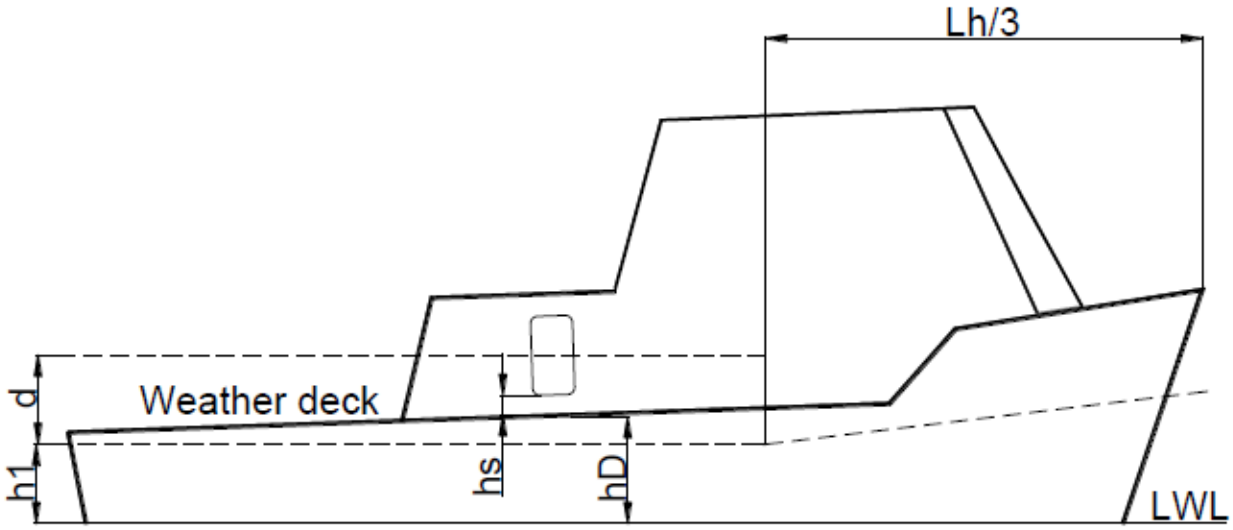


Figure 3.2: The measurements for defining coaming- and sill heights

If the deck height $h_D$ at the opening is smaller than the basic height h1, the coaming- or sill height shall be increased so the lowest edge of the opening is at least h1+hS1 above the deepest (loaded) waterline.

If the deck height at the opening is larger than h2, the coaming- or sill height hs2 shall be used.

The coaming- or sill height must not be reduced in the forward third of the craft length.

Coaming height is not required provided:

- The opening height above the waterline is in all load cases at least d+h1
- The size of the hatchway is max. 0.4 m2 in Design Category B

This exemption is, however, not valid for doorways to the interior, they must always have a coaming height according to Table 3.1.

In Design Category A temporarily open openings must always have coamings.

### 3.9.2 The length of the shorter side of the opening

This dimension is usually obvious, but in doubtful cases reference is made to the standard ISO 12216.

### 3.9.3 Degree of Water tightness

The Rules specify two degrees of water tightness:

- Watertight closing appliances (Tightness Level 1) stand continuous hydrostatic pressure without leaking; and
- Weather tight closing appliances (Tightness Level 2) stand temporary immersion without leaking.

The degree of water tightness is defined according to the standard ISO 12216

### 3.9.4 Latches and hinges for locking

Latches and hinges for closing appliances shall be arranged so the required degree of water tightness is achieved irrespectively of from which side the appliance is closed. Latches and hinges shall stand the forces from the pressure in the respective Application area without exceeding the material yield limit.

### 3.9.5 Hinged closing appliances

Closing appliances which are temporarily openable at sea shall be designed so they stay attached to the surrounding structure when open. In Application area 1 the openable appliances shall be hinged and open inwards. The hinges to be sufficiently strong. In doubtful cases the hinges shall be evaluated according to the standard ISO 12216.

### 3.9.6 Sliding hatches

In other areas than Application area 1 closing appliances may be sliding hatches or -doors, provided all relevant requirements in Table 3.1 are met. The depth of the groove to be sufficient for preventing the closing appliance from tearing out, considering the appropriate loads as well as the stiffness of the appliance and its surrounding structure. The groove generally to be at least 12 mm deep. When the latching of the closing appliance is evaluated, a supported groove edge may be considered a sufficient latch. The closing appliance needs to have stops at each end position, preventing it from sliding off.

### 3.9.7 CE-marked closing appliances

All closing appliances, including those made by the manufacturer of the craft or subcontracted by him, shall meet standard ISO 12216 and additionally these Rules where they exceed the requirements in the standard. Prefabricated commercially available closing appliances may be used without restrictions in the locations given in Tables 3.1-3.6 provided they are CE-marked, and according to ISO 12216 suitable for the Design Category and Application area in question.

### 3.9.8 Particular requirements for closing appliances in Application area 1

The following particular requirements refer for closing appliances in Application area 1:

- the bottom edge of the closing appliance must be at least at the minimum height above the waterline given in Table 3.2 in the fully loaded departure condition;
- the shorter side of the opening must not exceed 300 mm.;
- an opening appliance must open inwards;
- no part of the closing appliance must protrude outside a vertical line taken through the widest point of the craft, such as the hull, deck, or fixed rubbing strake;

### 3.9.9 Protection of gaskets

In such applications where Table 3.1 prescribes “protection of gaskets”, the gaskets made of rubber or other soft materials must be protected against wear for example according to Figure 3.3.

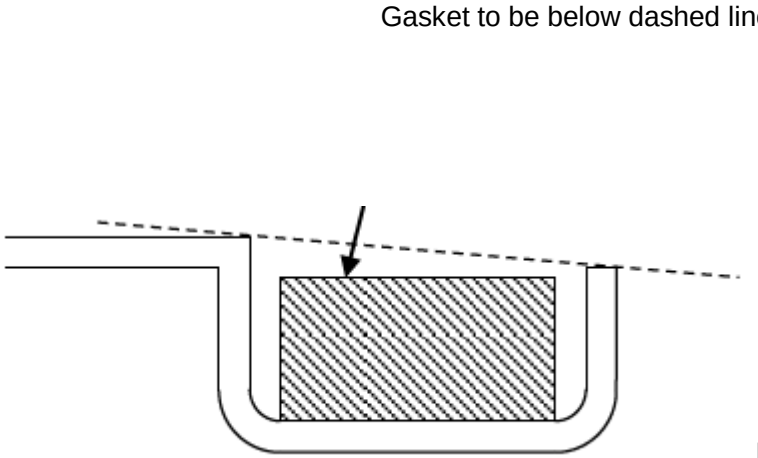


Figure 3.3: Protection of gaskets

### 3.9.10 Closing appliances on cargo decks

Closing appliances located on cargo decks must not have glazing. Protruding parts like latches must be very strong, or protected to stand the loads occurring in cargo handling.

## 3.10 Requirements for openings always open during operation.

A summary of requirements for openings always open during operation is given in Table 3.1.

### 3.10.1 Allowed locations for openings always open during operation

The number of openings that are always open during operation to be as small as possible. In craft to Design Category A and B such openings are not allowed in Application area 1 nor below the level LH/15. Openings necessary for the proper function of the craft must not be located in the forward one third of Design Category A craft. These requirements do not apply to air pipes meeting the specifications in item 3.15.

### 3.10.2 Preventing water from entering

The openings always open during operation must be conceived so the ingress of water is prevented as far as possible. This requirement is considered met if the intake is equipped with a baffle according to Figure 3.4, or a corresponding arrangement.

The ventilation openings shall primarily be facing aft, or to the sides.

In Design Category A and B the mentioned openings shall have a collar with a height over the surrounding deck according to Table 3.1, and be at least LH/15 above the fully loaded waterline.

In Design Category C and D craft the engine air intakes may be in Application area 1 provided they have arrangements preventing the ingress of water, and the stability and freeboard requirements are met.

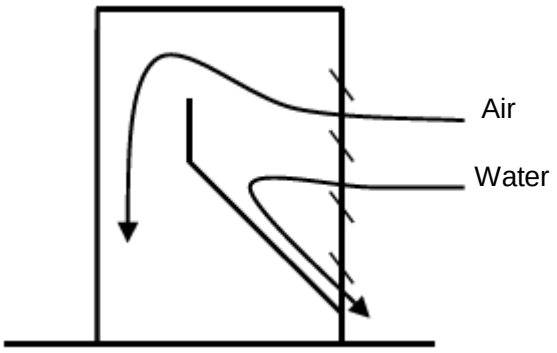


Figure 3.4 Air intake with baffle

## 3.11 Requirements for doors

### 3.11.1 Door sills

Half of the required sill height specified in Table 3.1 may be in a semi-fixed sill. The semi-fixed part shall be attached to the fixed sill part, or be continuously ready for use close to the door.

### 3.11.2 Direction of opening for doors

Doors in the superstructure sides to have the hinges forward. Hinged doors to open outwards.

### 3.11.3 Latches and hinges

Irrespective of the maximum distance between latches specified in Table 3.1, Design Category A and B craft doors shall have at least two latches in addition to the hinges. Doors to be openable from both sides.

## 3.12 Requirements for hatches

### 3.12.1 Special requirements for hatches

Hatches that can be open at sea shall have the possibility to be secured in the open position.

Glazed hatches are not allowed in engine spaces, instead lighting to be arranged according to the guidelines in Chapter 21.

Hatches below the waterline are allowed only provided all relevant freeboard-, stability, and damage stability requirements are met, assuming that the space behind the hatch is water filled without any possibility of leakage into other compartments. Such hatches shall have the same strength as the

surrounding hull structure. The strength of the space in question shall be sufficient to stand the local sea pressures.

## 3.13 Requirements for windows

A summary of the requirements is given in Tables 3.3-3.6

### 3.13.1 Special requirements for windows

The following special requirements are given:

- the windows around the control position must not be tinted (see Chapter 29)
- windows are not allowed in engine spaces, instead lighting to be arranged according to the guidelines in Chapter 21.
- the thickness of the windows to be at least according to Tables 3.3-3.6 for tempered glass, and for other materials the window thickness to be determined according to the standard ISO 12216, using, however, the following dimensioning pressures:
    - Application area 1, all planning classes, 70 kPa;
    - Application area 2, planning classes A and B, 12 kPa;
    - Application area 2, planning classes C and D, 9 kPa;
    - Application area 3, planning classes A and B, 28 kPa;
    - Application area 3, planning classes C and D, 12 kPa;
    - Application area 4, planning classes A and B, 12 kPa;
    - Application area 4, planning classes C and D, 9 kPa.
- for laminated glass with the number of layers n and the thickness of individual layers tn the compliance is determined using Formula (3.6) and (3.7). treq is the thickness requirement for a solid window according to Table 3.3-3.6.

$$\sum t_n = 1{,}2 \cdot t_{vaat} \text{ [mm]; n = 2} \quad (3.6)$$

$$\sum t_n = 1{,}5 \cdot t_{vaat} \text{ [mm]; n > 2} \quad (3.7)$$

## 3.14 Requirements for hull ports

Hull ports are openings leading into the hull, fitted with closing appliances, including hatches in the bulwark on fully enclosed craft, where the bulwark makes up the forecastle, see 4.10.

## 3.15 Freeboard to the lower edge of hull ports

The minimum freeboard to the lower edge of hull ports shall be 200 mm.

## 3.16 Strength

The strength of hull ports to be at least the same as the surrounding structure. If the sea pressure can load the hinges or latches, they shall be designed to stand these loads.

### 3.16.1 Water tightness

Hull ports to be watertight to Tightness Level 2. The gaskets to be protected according to Figure 3.3.

### 3.16.2 Hinges and latching mechanisms

The hinges to be able to carry the sea pressure loads on the hull port.

The latching mechanism shall force the hull port against its gasket so the required tightness is achieved.

There must be two alternative latching mechanisms, one of them to be independent of hydraulic pressure and/or electrical power.

## 3.17 Requirements for air pipes

The height above the surrounding deck for air pipes leading into the weather tight hull shall be at least 80% of the height required for openings always open at sea in the same position (see Table 3.1), or at least 250 mm. The cross section must not exceed 50 cm2, and arrangements for preventing the ingress of water are required.

## 3.18 Through-hulls connected to on-board systems

### 3.18.1 General

Through-hulls located lower than 100 mm above the fully loaded waterline shall always have sea cocks where they penetrate the hull.

For through-hull locations between 100…350 mm above the fully loaded waterline seacocks are required if the entire system connected to the through-hull is below the 350 mm level, and the system has an open end inside the craft. If this system inside end is closed, a sea cock is not required. A non-return valve is considered equivalent to a closed end. A seacock is not required either if the system is partly above the 350 mm level (gooseneck), equipped with a siphon break, and can stand 15 degrees of heel without leaking.

For through-hulls located more than 350 mm above the fully loaded waterline, neither seacocks nor non-return valves are required, provided the through-hulls do not leak at 15 degrees heel in the fully loaded condition.

The requirements for through-hulls connected to on-board systems are visualized in Figure 3.5.

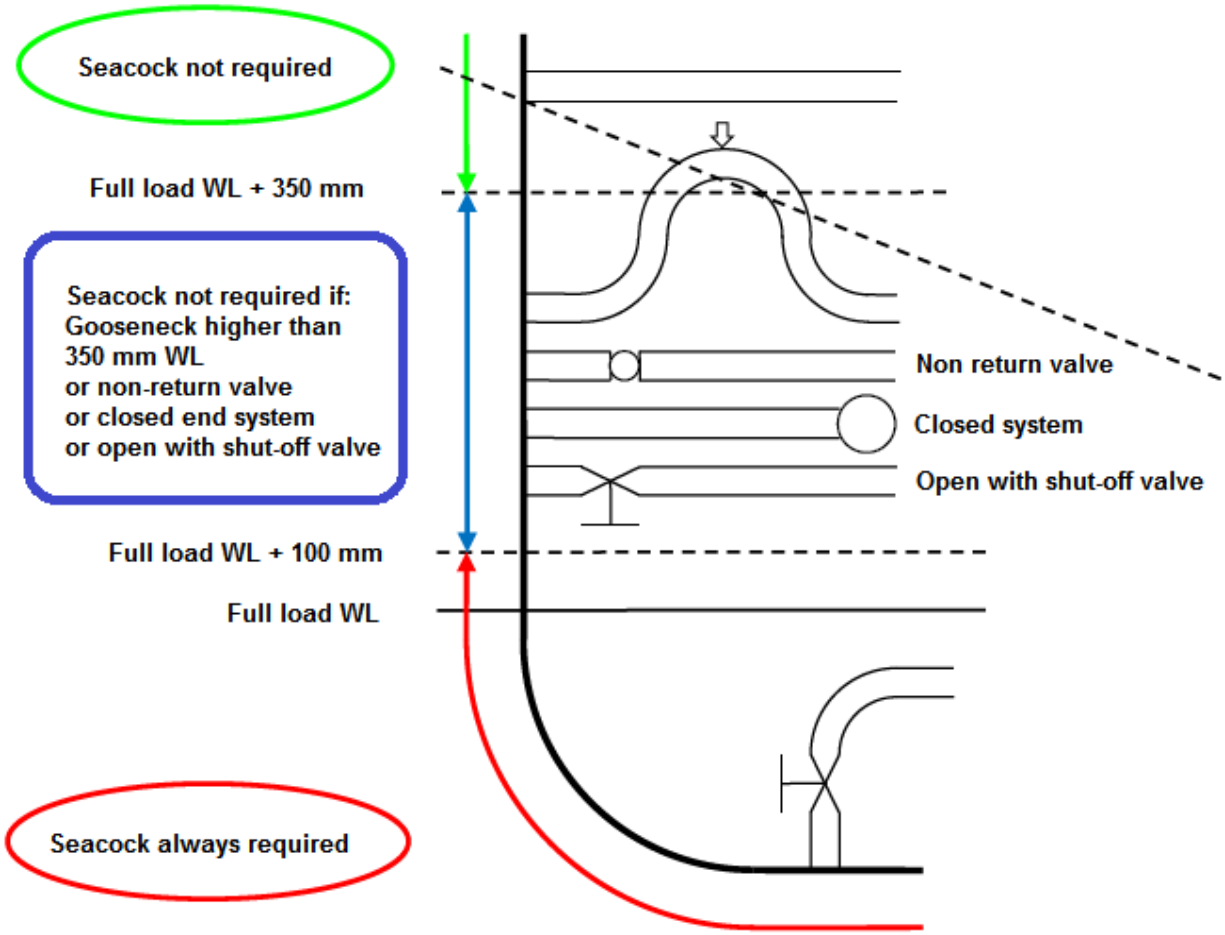


Figure 3.5 Requirements for through-hulls connected to on-board systems

### 3.18.2 Through-hull fittings and seacocks

The through-hull fittings and seacocks shall meet the requirements for such components in the standards ISO 9093-1 and -2 or equal.

For FRP hulls the through-hulls to be of bronze, brass (minimum 80% copper) or stainless steel (AISI 316). These are allowed in all applications. Through-hulls of non-metallic materials meeting the standard ISO 9093-2, are allowed outside the engine spaces in craft of less than 15 m length.

For aluminium or steel hulls through-hulls or seacocks of copper alloys are not permitted.

### 3.18.3 Accessibility

All seacocks shall be easily accessible. The accessibility requirements are given in Chapter 31.

### 3.18.4 Requirements for on-board systems connected to through-hulls

The hoses connected to through-hulls shall be fabric-reinforced and able to stand the pressures occurring in the connected systems. For discharging system hoses there are additional requirements in Chapter 6.

### 3.18.5 Galvanic corrosion

The combination of materials to be chosen so that galvanic corrosion is avoided.

### 3.18.6 Hose connections

For the hoses connections in through-hull systems double hose clamps of stainless steel (AISI 316) to be used if the stud diameter exceeds 25 mm. As an alternative to double clamps a single heavy duty super-clamp with two bolts, and over 15 mm width may be used.

## 3.19 Penetrations in outboard engine wells

### 3.19.1 Cable and hose penetrations

The cable and hose penetrations in outboard engine splash wells shall meet the requirements in the standard ISO 12217-1 for tightness and installation height.

The penetrations must always be entirely above the transom overflow edge.

### 3.19.2 Ventilation openings

Ventilation openings located in the outboard engine well and leading into the hull shall have their lower edge at a height specified in Chapter 4 for freeboard to a downflooding opening.

Table 3.1: Summary of requirements for openings and closing appliances located on the weatherdeck (hatches, doors, and always open ventilation and other openings).

| Opening's Closing Status | Always open | | | | Occasionally open at sea | | | | Closed at sea | | | |
|---|---|---|---|---|---|---|---|---|---|---|---|---|
| Design Category | A | B | C | D | A | B | C | D | A | B | C | D |
| Freeboard and downflooding angle requirements in Chapter 4 | YES | | | | | | | | NO | | | |
| Location $L_H/3$ from bow | NO | NO | | | | | | | | | | |
| Application area 1 (topside) | NO | NO | | | | | | | | | | |

VTT EXPERT SERVICES LTD

Return to the cover page

| Opening's Closing Status | Always open | | | | Occasionally open at sea | | | | Closed at sea | | | |
|---|---|---|---|---|---|---|---|---|---|---|---|---|
| Coaming height at level $h_{S1}$,[m], $L_H$=24 m [1) 2)] | 0.90 | 0.68 | 0.38 | 0.10 | 0.60 | 0.45 | 0.25 | 0.10 | | | | |
| Coaming height at level $h_{S1}$, [m], $L_H \leq 15$ m [1) 2)] | 0.68 | 0.45 | 0.38 | 0.10 | 0.45 | 0.38 | 0.25 | 0.10 | | | | |
| Coaming height at level $h_{S2}$, [m],[3)] | 0.57 | 0.45 | 0.38 | 0.10 | 0.25 | 0.15 | 0.075 | 0.05 | | | | |
| Min. downflooding angle when appliance is open, degrees. | See Chapter 4 Table 4.1 | | | | 25 | 20 | 15 | 10 | | | | |
| Max.allowed appliance size [$m^2$] without coamings | | | | | 0.4 | 0.4 | | | | | | |
| Tightness degree | 2 | 2 | 2 | 2 | 2 | 2 | 2 | 2 | 2 | 2 | 2 | 2 |
| Prevention of water ingress | x | x | x | x | | | | | | | | |
| Locking device distance C-C, max | | | | | 800 mm for doors, 600 mm for hatches | | | | | | | |
| Gaskets protected (see Figure 3.3) | | | | | x | x | x | x | x | x | x | x |
| CE-marked appliances allowed without further requirements | | | | | Yes, except for cargo decks. Not for craft with Add.Notation"Ice Reinforcement" | | | | | | | |

1) The specified coaming height refers for deck height h1, if the local deck height is greater this reduces the requirement, see item 3.9.1

2) The height values between 15 and 24 m are found by linear interpolation

3) Hatches without coamings may be allowed on the weather deck provided the following conditions are met:

- The hatch is at least at the height d + h1 (see item 3.9 in the text)
- The hatch area is maximum 0.4 m2 in Design Category B
- In Design Category A temporarily open hatches without coamings are not allowed
- Neither does this exception apply to doors leading into the craft interior, they must always have coaming heights according to Table 3.1.

Table 3.2: Summary of requirements for closing appliances in Application area 1 (hull topside)

| Appliance status when craft is underway | Closed | | | |
|---|---|---|---|---|
| Design Category | A | B | C | D |
| Material limitations | If glass is used, must be ”high impact resistance” quality according to ISO 12216 | | | |
| Closing appliance recessed or protected in some other way | x | x | x | x |
| Largest minimum dimension, [mm ] | 300 | 300 | 300 | 300 |
| Lower edge above waterline, min. [mm] | 500 | 400 | 300 | 200 |
| Lowest downflooding angle when appliance is open, [degrees] | 25 | 20 | 15 | 10 |
| Tightness degree | 2 | 2 | 2 | 2 |
| Gaskets protected (see Figure 3.3) | x | x | x | x |
| Storm shutters required | x | x | x | |
| CE-marked closing appliances allowed without further requirements | See ”Material limitations” higher up in this table! | | | |

VTT EXPERT SERVICES LTD

Return to the cover page

Table 3.3 Required thicknesses for tempered glass windows, P=70 kPa, in Application area 1 (hull topside), all Design
Categories

| Longer side, mm | Shorter side, mm 100 | 150 | 200 | 250 | 300 | Minimum thickness $L_H$ | $t_{MIN}$ |
|---|---|---|---|---|---|---|---|
| 300 | 4 | 4 | 5 | 6 | 6 | 6 | 6 |
| 400 | 4 | 5 | 6 | 7 | 7 | 9 | 7 |
| 500 | 5 | 6 | 6 | 7 | 8 | 12 | 7 |
| 600 | 6 | 6 | 7 | 7 | 8 | 15 | 7 |
| 700 | 6 | 7 | 8 | 8 | 9 | 18 | 7 |
| 800 | 7 | 7 | 8 | 9 | 9 | 21 | 8 |
| 900 | 7 | 8 | 9 | 9 | 10 | 24 | 8 |
| 1000 | 8 | 9 | 9 | 10 | 11 | | |

Table 3.4: Required thicknesses for tempered glass windows, P=28 kPa, in Application area 3 (front bulkhead and other forward facing areas), Design Categories A and B

| Longer side, mm | Shorter side, mm 300 | 350 | 400 | 450 | 500 | 550 | 600 | 650 | 700 | 750 | 800 | 850 | 900 | 950 | 1000 |
|---|---|---|---|---|---|---|---|---|---|---|---|---|---|---|---|
| 300 | 6 | | | | | | | | | | | | | | |
| 350 | 6 | 6 | | | | | | | | | | | | | |
| 400 | 6 | 6 | 6 | | | | | | | | | | | | |
| 450 | 6 | 6 | 6 | 6 | | | | | | | | | | | |
| 500 | 6 | 6 | 6 | 6 | 6 | | | | | | | | | | |
| 550 | 6 | 6 | 6 | 6 | 7 | 7 | | | | | | | | | |
| 600 | 6 | 6 | 6 | 7 | 7 | 7 | 7 | | | | | | | | |
| 650 | 6 | 6 | 6 | 7 | 7 | 7 | 8 | 8 | | | | | | | |
| 700 | 6 | 6 | 7 | 7 | 8 | 8 | 8 | 8 | 8 | | | | | | |
| 750 | 6 | 7 | 7 | 7 | 8 | 8 | 8 | 9 | 9 | 9 | | | | | |
| 800 | 6 | 7 | 7 | 7 | 8 | 8 | 9 | 9 | 9 | 9 | 9 | | | | |
| 850 | 7 | 7 | 7 | 8 | 8 | 8 | 9 | 9 | 9 | 9 | 10 | 10 | | | |
| 900 | 7 | 7 | 8 | 8 | 8 | 9 | 9 | 9 | 10 | 10 | 10 | 10 | 10 | | |
| 950 | 7 | 8 | 8 | 8 | 8 | 9 | 9 | 10 | 10 | 10 | 10 | 10 | 10 | 10 | |
| 1000 | 7 | 8 | 8 | 8 | 9 | 9 | 9 | 10 | 10 | 10 | 11 | 11 | 11 | 11 | 11 |
| 1050 | 8 | 8 | 8 | 9 | 9 | 9 | 10 | 10 | 10 | 11 | 11 | 11 | 11 | 11 | 11 |
| 1100 | 8 | 8 | 8 | 9 | 9 | 9 | 10 | 10 | 10 | 11 | 11 | 11 | 11 | 12 | 12 |
| 1150 | 8 | 8 | 9 | 9 | 9 | 10 | 10 | 10 | 11 | 11 | 11 | 12 | 12 | 12 | 12 |
| 1200 | 8 | 8 | 9 | 9 | 9 | 10 | 10 | 10 | 11 | 11 | 11 | 12 | 12 | 12 | 12 |
| 1250 | 8 | 9 | 9 | 9 | 10 | 10 | 10 | 10 | 11 | 11 | 12 | 12 | 12 | 12 | 13 |
| 1300 | 8 | 9 | 9 | 10 | 10 | 10 | 10 | 11 | 11 | 11 | 12 | 12 | 12 | 13 | 13 |
| 1350 | 9 | 9 | 9 | 10 | 10 | 10 | 11 | 11 | 11 | 12 | 12 | 12 | 13 | 13 | 13 |
| 1400 | 9 | 9 | 10 | 10 | 10 | 10 | 11 | 11 | 11 | 12 | 12 | 12 | 13 | 13 | 13 |
| 1450 | 9 | 9 | 10 | 10 | 10 | 11 | 11 | 11 | 11 | 12 | 12 | 13 | 13 | 13 | 13 |
| 1500 | 9 | 9 | 10 | 10 | 11 | 11 | 11 | 11 | 12 | 12 | 12 | 13 | 13 | 13 | 14 |

VTT EXPERT SERVICES LTD

Return to the cover page

Table 3.5: Required thickness for tempered glass windows P=12 kPa

Application area 2 (weather deck) Design Categories A and B

Application area 4 (above second deck level) Design Categories A and B

Application area 3 (front bulkhead and other forward facing areas) Design Categories C and D

| | | Shorter side, mm | | | | | | | | | | | | | | |
|---|---|---|---|---|---|---|---|---|---|---|---|---|---|---|---|---|
| | | 300 | 350 | 400 | 450 | 500 | 550 | 600 | 650 | 700 | 750 | 800 | 850 | 900 | 950 | 1000 |
| Longer side, mm | 300 | 5 | | | | | | | | | | | | | | |
| | 350 | 5 | 5 | | | | | | | | | | | | | |
| | 400 | 5 | 5 | 5 | | | | | | | | | | | | |
| | 450 | 5 | 5 | 5 | 5 | | | | | | | | | | | |
| | 500 | 5 | 5 | 5 | 5 | 5 | | | | | | | | | | |
| | 550 | 5 | 5 | 5 | 5 | 5 | 5 | | | | | | | | | |
| | 600 | 5 | 5 | 5 | 5 | 5 | 5 | 5 | | | | | | | | |
| | 650 | 5 | 5 | 5 | 5 | 5 | 5 | 5 | 5 | | | | | | | |
| | 700 | 5 | 5 | 5 | 5 | 5 | 5 | 5 | 5 | 5 | | | | | | |
| | 750 | 5 | 5 | 5 | 5 | 5 | 5 | 5 | 6 | 6 | 6 | | | | | |
| | 800 | 5 | 5 | 5 | 5 | 5 | 5 | 6 | 6 | 6 | 6 | 6 | | | | |
| | 850 | 5 | 5 | 5 | 5 | 6 | 6 | 6 | 6 | 6 | 6 | 6 | 6 | | | |
| | 900 | 5 | 5 | 5 | 6 | 6 | 6 | 6 | 6 | 6 | 6 | 7 | 7 | 7 | | |
| | 950 | 5 | 5 | 6 | 6 | 6 | 6 | 6 | 6 | 6 | 7 | 7 | 7 | 7 | 7 | |
| | 1000 | 5 | 6 | 6 | 6 | 6 | 6 | 6 | 7 | 7 | 7 | 7 | 7 | 7 | 7 | 7 |
| | 1050 | 5 | 6 | 6 | 6 | 6 | 6 | 7 | 7 | 7 | 7 | 7 | 7 | 7 | 7 | 7 |
| | 1100 | 6 | 6 | 6 | 6 | 6 | 7 | 7 | 7 | 7 | 7 | 7 | 7 | 7 | 8 | 8 |
| | 1150 | 6 | 6 | 6 | 6 | 7 | 7 | 7 | 7 | 7 | 7 | 7 | 8 | 8 | 8 | 8 |
| | 1200 | 6 | 6 | 6 | 7 | 7 | 7 | 7 | 7 | 7 | 8 | 8 | 8 | 8 | 8 | 8 |
| | 1250 | 6 | 6 | 7 | 7 | 7 | 7 | 7 | 7 | 8 | 8 | 8 | 8 | 8 | 8 | 8 |
| | 1300 | 6 | 6 | 7 | 7 | 7 | 7 | 7 | 8 | 8 | 8 | 8 | 8 | 8 | 8 | 8 |
| | 1350 | 6 | 6 | 7 | 7 | 7 | 7 | 8 | 8 | 8 | 8 | 8 | 8 | 8 | 8 | 9 |
| | 1400 | 6 | 7 | 7 | 7 | 7 | 8 | 8 | 8 | 8 | 8 | 8 | 8 | 8 | 9 | 9 |
| | 1450 | 6 | 7 | 7 | 7 | 7 | 8 | 8 | 8 | 8 | 8 | 8 | 9 | 9 | 9 | 9 |
| | 1500 | 7 | 7 | 7 | 7 | 8 | 8 | 8 | 8 | 8 | 8 | 9 | 9 | 9 | 9 | 9 |

VTT EXPERT SERVICES LTD

Return to the cover page

Table 3.6: Required thickness for tempered glass windows P=9 kPa
Application area 2 and 4, Design Categories C and D

| Longer side, mm | Shorter side, mm | | | | | | | | | | | | | | |
|---|---|---|---|---|---|---|---|---|---|---|---|---|---|---|---|
| | 300 | 350 | 400 | 450 | 500 | 550 | 600 | 650 | 700 | 750 | 800 | 850 | 900 | 950 | 1000 |
| 300 | 5 | | | | | | | | | | | | | | |
| 350 | 5 | 5 | | | | | | | | | | | | | |
| 400 | 5 | 5 | 5 | | | | | | | | | | | | |
| 450 | 5 | 5 | 5 | 5 | | | | | | | | | | | |
| 500 | 5 | 5 | 5 | 5 | 5 | | | | | | | | | | |
| 550 | 5 | 5 | 5 | 5 | 5 | 5 | | | | | | | | | |
| 600 | 5 | 5 | 5 | 5 | 5 | 5 | 5 | | | | | | | | |
| 650 | 5 | 5 | 5 | 5 | 5 | 5 | 5 | 5 | | | | | | | |
| 700 | 5 | 5 | 5 | 5 | 5 | 5 | 5 | 5 | 5 | | | | | | |
| 750 | 5 | 5 | 5 | 5 | 5 | 5 | 5 | 5 | 5 | 5 | | | | | |
| 800 | 5 | 5 | 5 | 5 | 5 | 5 | 5 | 5 | 5 | 5 | 5 | | | | |
| 850 | 5 | 5 | 5 | 5 | 5 | 5 | 5 | 5 | 5 | 5 | 5 | 5 | | | |
| 900 | 5 | 5 | 5 | 5 | 5 | 5 | 5 | 5 | 5 | 6 | 6 | 6 | 6 | | |
| 950 | 5 | 5 | 5 | 5 | 5 | 5 | 6 | 6 | 6 | 6 | 6 | 6 | 6 | 6 | |
| 1000 | 5 | 5 | 5 | 5 | 5 | 6 | 6 | 6 | 6 | 6 | 6 | 6 | 6 | 6 | 6 |
| 1050 | 5 | 5 | 5 | 5 | 6 | 6 | 6 | 6 | 6 | 6 | 6 | 6 | 6 | 6 | 6 |
| 1100 | 5 | 5 | 5 | 6 | 6 | 6 | 6 | 6 | 6 | 6 | 6 | 6 | 6 | 7 | 7 |
| 1150 | 5 | 5 | 6 | 6 | 6 | 6 | 6 | 6 | 6 | 7 | 7 | 7 | 7 | 7 | 7 |
| 1200 | 5 | 5 | 6 | 6 | 6 | 6 | 6 | 6 | 7 | 7 | 7 | 7 | 7 | 7 | 7 |
| 1250 | 5 | 6 | 6 | 6 | 6 | 6 | 6 | 7 | 7 | 7 | 7 | 7 | 7 | 7 | 7 |
| 1300 | 6 | 6 | 6 | 6 | 6 | 6 | 7 | 7 | 7 | 7 | 7 | 7 | 7 | 7 | 7 |
| 1350 | 6 | 6 | 6 | 6 | 6 | 7 | 7 | 7 | 7 | 7 | 7 | 7 | 7 | 7 | 8 |
| 1400 | 6 | 6 | 6 | 6 | 7 | 7 | 7 | 7 | 7 | 7 | 7 | 7 | 8 | 8 | 8 |
| 1450 | 6 | 6 | 6 | 6 | 7 | 7 | 7 | 7 | 7 | 7 | 8 | 8 | 8 | 8 | 8 |
| 1500 | 6 | 6 | 6 | 7 | 7 | 7 | 7 | 7 | 7 | 8 | 8 | 8 | 8 | 8 | 8 |

# 4 FREEBOARD AND INTACT STABILITY

## 4.1 Objective

The objective in this chapter is to ensure that:

- The craft has sufficient reserve buoyancy in reference to the craft concept, the Design Category, and to the fully loaded displacement in order to stand a limited leak or overload without sinking or capsizing;
- The deck arrangement for craft encountering breaking seas is planned so water swiftly drains back to the sea, and for all craft the openings leading into the craft interior are located and protected so water ingress is prevented; and
- The craft stability is such that the heeling angles caused by the expeced heeling moments do not prevent the safe use of the craft, and the reserve against capsize or filling with water is sufficiently large in the Design Category worst conditions, also considering the possible special missions for the craft.

Note! In Chapters 33-41 additional requirements are given for craft special missions.

## 4.2 References

In this chapter reference is made to the following documents:

- ISO 12217-1:2015 Small craft – Stabillity and buoyancy assessment and categorization
- ISO 11812:2001 Small craft – Watertight cockpits and quick-draining cockpits
- ISO 12216:2002 Small craft - Windows, portlights, hatches, deadlights and doors – Strength and watertightness
- ISO 6185-3:2014 Inflatable boats Part 3
- ISO 6185-4:2011 Inflatable boats Part 4
- ISO 15372:2000 Ships and marine technology – Inflatable rescue boats – Coated fabrics for inflatable chambers
- IMO MSC 81(70)

## 4.3 Documentation

For verifying that the requirements presented in this chapter are met, the following documentation is required:

- Geometry of hull (normally a Lines drawing);
- Geometry of weather tight decks and superstructures (fully and partially decked craft);
- Geometry and location of tanks;
- Load components included in the fully loaded condition, and their location;
- Material certificates and test reports for buoyancy foam and pontoon materials;

- Test protocols for pontoons and other air buoyancy chambers;
- Verification of lightweight and center of gravity (usually inclining test report);
- Stability calculations, or stability test report where the attained numbers are presented in reference to the relevant criteria;
- Stability instruction for the master, where information is given about the maximum allowed load, and possible limitations in this connection;

## 4.4 Assessment alternatives and requirements

### 4.4.1 General

The craft is to be assessed using one of the options given in Tables 4.1, 4.2, and 4.3, depending on the craft Design Category, and Craft Concept (see Ch. 2). The principles in the options correspond to those presented in standard ISO 12217. Note that all options in ISO 12217 are not implemented. The requirements in Tables 4.1, 4.2, and 4.3 shall be met in all relevant loading conditions. More detailed explanations can be found in the text sections referred to in the tables.

VTT EXPERT SERVICES LTD

Return to the cover page

Table 4.1 The requirements for the alternative Fully enclosed craft

| **Assessment option Nr.** | | 1A | 1B | 2C | 2D |
|---|---|---|---|---|---|
| **Craft concept** | | Fully enclosed | | | |
| **Design Category** | | A [1)] | B | C | D |
| **Recesses**<br>(see. 4.8) *LC3* [1)] | Type of recess | Quick draining | | | |
| | Consider Free surface effects on stability | x | x | x | |
| **Freeboard to deck edge** [3)]<br>Monohulls only<br>(see 4.9) *LC2* [1)] | Minimum freeboard to deck edge, $F_{MIN}$, fraction of $F_{BASE}$<br>$F_{BASE} = 0{,}7 \cdot \frac{\nabla}{1000 \cdot L_{WL} \cdot B_{WL}}$ | 1.0 · $F_{BASE}$ | 0.9 · $F_{BASE}$ | 0.75 · $F_{BASE}$ | 0.5 · $F_{BASE}$ |
| **Reserve buoyancy** [3)]<br>For all multihulls,<br>alternative for monohulls<br>(see 4.9) *LC2* [1)] | Volume of weathertight spaces above waterline to the downflooding opening lower edge, as percent of fully loaded displacement | 100 | 70 | 30 | 20 |
| **Bow buoyancy** (see 4.10)<br>*LC1, LC2, LC3* [1)] | Freeboard at bow, $F_{BOW}$ [m] | 0.5+0.02·$L_H$ | 0.3+0.02·$L_H$ | 0.2+0.02·$L_H$ | 0.05+0.02·$L_H$ |
| **Height of down-flooding opening**<br>(see 4.11) *LC2* [1)] | $h_D$ *[m]* | $L_H$/17 | $L_H$/17 | $L_H$/17 | $L_H$/20 |
| | Minimum [m] | 0.50 | 0.40 | 0.35 | 0.30 |
| | Maximum [m] | 1.41 | 1.41 | 0.75 | 0.40 |
| **Downflooding angle [º]**<br>(see 4.12)<br>*LC1, LC2, LC3* [1)] | Openings always open at sea<br>$Ø_O$ = heeling angle with offset load | $Ø_O$+25<br>min. 30º | $Ø_O$+15<br>min. 25º | | |
| | Openings temporarily open at sea. See also Table 3.1! | 25 | 20 | 15 | 10 |
| **Stability with offset load** | Maximum heeling angle[º] | | | | |

| | | | | | |
|---|---|---|---|---|---|
| (see 4.12) *OFFSET* 1) 3) | Residuary freeboard [m] | | | $0.014 \cdot L_H$ | 0.01 |
| **Maximum righting moment** (see 4.13) *LC1, LC2, LC3* 1) | $RM_{max}$ [kNm] $Ø_{GZmax} \geq 30°$ | 25 | 7 | | |
| | $RM_{max}$ [kNm] $Ø_{GZmax} < 30°$ | $750/Ø_{GZmax}$ | $210/Ø_{GZmax}$ | | |
| **GZ-curve properties** (see 4.14) *LC1, LC2, LC3* | $GZ_{30}$ [m], $Ø_{GZmax} \geq 30°$ | ≥0.20 | | ≥0.20 | |
| | $GZ_{MAX}$ [m], $Ø_{GZmax} < 30°$ | $\geq 6/Ø_{GZmax}$ | | $\geq 6/Ø_{GZmax}$ | |
| | Stability range $Ø_v$ 3) | ≥ 90° | ≥ 60° | | |
| **Rolling in wind and waves from the side** *LC1, LC2, LC3* 1) (see 4.15) | Nominal wind speed $v_w$ [m/s] | 28 | 21 | | |
| | Area $A_2 \geq A_1$, when $Ø_R$ = | 25+20/▽ | 20+20/▽ | | |
| **Wind induced heel** (see 4.16) *LC1, LC2, LC3* 1) | If $A_{LV} > 0.5 \cdot L_H \cdot B_H$ and *vw [m/s]* | | | 17 | 13 |
| | Wind induced heel $Ø_w$ $Ø_D$=downflooding angle [°] | | | $<0.7 \cdot Ø_{O(R)}$ $<0.7 \cdot Ø_D$ | |
| **Habitable multihulls** (see 4.18) *LC1* 1) | If "susceptible to capsizing": - To stay afloat inverted - Emergency exit inverted | | | YES | |

1) Only for hull length 6 m or over

3) Not applied to craft meeting the requirements in Chapter 38 (one compartment subdivision)

3) Ice accretion need not be considered for additional notation "Ice reinforcement".

Table 4.2: Requirements and test procedures according to the assessment alternative for rigid bottom inflatables (RIB) and other craft with buoyancy chambers.

| **Assessment alternative Nr.** | | 3B | 3C | 3D |
|---|---|---|---|---|
| **Craft concept** | | Rigid bottom inflatable (RIB) or other craft with buoyancy chambers | | |
| **Design Category** | | B [1)] | C | D |
| **Recesses**<br>(see 4.8) *LC3* [1)] | Recess type | Water tight or quick draining | | |
| **Downflooding opening height**<br>(see 4.11) *LC1, LC2* [1)] | *$h_D$ [m]* | $L_H/17$ | $L_H/17$ | $L_H/20$ |
| | Minimum [m] | 0.40 | 0.35 | 0.30 |
| | Maximum [m] | 1.41 | 0.75 | 0.40 |
| **Downflooding angle[°]**<br>(see 4.12)<br>*LC1, LC2 LC3* [1)] | $Ø_O$=heeling angle with offset load | $Ø_O$+15<br>at least 25° | | |
| **Stability with offset load**<br>(see 4.12) OFFSET [1) 3)] | Maximum heel [°] | $Ø_{O(R)} = 11{,}5 + \frac{(24 - L_H)^3}{520}$ | | |
| | Residuary freeboard [m] | | $0.014 \cdot L_H$ | 0.01 |
| **Maximum righting moment**<br>(see 4.13)<br>*LC1, LC2, LC3* [1)] | *$RM_{max}$* [kNm]<br>$Ø_{GZmax} \geq 30°$ | 7 | | |
| | *$RM_{max}$* [kNm]<br>$Ø_{GZmax} < 30°$ | $210/ Ø_{GZmax}$ | | |
| **GZ-curve properties**<br>(see 4.14)<br>*LC1, LC2, LC3* [1)] | *$GZ_{30}$ [m]*<br>$Ø_{GZmax} \geq 30°$ | ≥0.20 | ≥0.20 | ≥0.20 |
| | *$GZ_{MAX}$ [m]*<br>$Ø_{GZmax} < 30°$ | $\geq 6/Ø_{GZmax}$ | $\geq 6/Ø_{GZmax}$ | $\geq 6/Ø_{GZmax}$ |
| | Stability range $Ø_v$ | ≥ 60° | | |
| **Weather criterion** | Nominal wind | 21 | | |

| | | | | |
|---|---|---|---|---|
| (see 4.15)<br>*LC1, LC2, LC3* [1)] | speed $v_w$ [m/s] | | | |
| | Area $A_2 \geq A_1$,<br>kun $Ø_R$ =20+20/▽ | | | |
| **Wind induced heel**<br>(see 4.16)<br>*LC1, LC2, LC3* [1)] | If $A_{LV} > 0.5 \cdot L_H \cdot B_H$ and $v_w$ *[m/s]* | | 17 | 13 |
| | Wind induced heel $Ø_w$<br>$Ø_D$=downflooding angle [º] | | <0.7·$Ø_{O(R)}$<br><0.7·$Ø_D$ | |
| **Flotation**<br>(see 4.17) *LC2* [1)] | Flotation and stability when waterfilled | Shall float nearly horizontal fully loaded. To stand a load of 6·CL on the side rail. For CL see 1.12.2 | | |
| **Flotation elements**<br>(see 4.17) [3)] | Arrangement | The floatation elements' combined volume (=pontoons+air chambers+foam floatation+solid structure) minimum 1,33 * $m_{LDC}$ [l] | | |
| | | [2)] For RIB:s the pontoon volume shall be at least 0.665*$m_{LDC}$ [l]. The pontoon volume to be divided into at least 5 parts. Each part to be ±20 % of the average | | |
| | | If no RIB, no requirements for pontoon volume. | | |
| | | The number of air chambers depend on their share of the necessary total float volume and the Design Category according to item 4.17.3 | | |
| | Material | The pontoon material shall meet ISO 15372:2000<br>Foam floatation according to ISO 6185 | | |
| | Testing | Air chamber test pressure 5 kPa | | |
| | | Pressure and leak testing of pontoons according to ISO 6185 | | |

1) Only for hull length 6 m and over

2) The craft falls under the RIB-standard ISO 6185 if the pontoons volume is more than half of the required float volume

3) Ice accretion need not be considered for additional notation "Ice reinforcement".

Table 4.3: Requirements for partially protected and open craft

| **Assessment alternative Nr.** | | 5C | 5D | 6C | 6D |
|---|---|---|---|---|---|
| **Craft concept** | | Partially protected | | Open | |
| **Design Category** | | C | D | C | D |
| **Recesses**<br>(see 4.8)<br>*LC3* [1)] | Recess type | Small watertight or quick draining recesses allowed<br>$V<L_H \cdot B_H \cdot F_M/40$ | | To be quick draining if entirelyforward of $L_H/2$, otherwise no restrictions | |
| **Bow buoyancy**<br>(see. 4.10)<br>*LC1, LC2, LC3* [1)] | Freeboard at bow | | | $1.15 \cdot L_H/10$<br>min 0.69 m | min 0.46 m |
| **Height of down-flooding opening**<br>(see 4.11) *LC1, LC2* [1)] | $h_D$ *[m]* | $L_H/12$ | - | $L_H/10$ | - |
| | Minimum [m] | 0.50 | 0.4 | 0.6 | 0.4 |
| | Maximum [m] | 0.75 | - | 0.75 | - |
| **Stability with offset load**<br>(see 4.12) *OFFSET* [1) 3)] | Maximum heel [°] | $Ø_{O(R)} = 11{,}5 + \frac{(24 - L_H)^3}{520}$ | | | |
| | Residuary freeboard [m] | 0.,014·$L_H$ | 0.01 | 0.014·$L_H$ | 0.01 |
| **GZ-curve properties**<br>(see 4.14)<br>*LC1, LC2, LC3* [1)] | $GZ_{30}$ [m]<br>$Ø_{GZmax} \geq 30°$ | ≥0.20 | | | |
| | $GZ_{MAX}$ [m]<br>$Ø_{GZmax} < 30°$ | $\geq 6/Ø_{GZmax}$ | | | |
| **Wind induced heel**<br>(see 4.16)<br>*LC1, LC2, LC3* [1)] | If $A_{LV} > 0.5 \cdot L_H \cdot B_H$ and $v_w$ [m/s] = | 17 | 13 | 17 | 13 |
| | Wind induced heel $Ø_w$<br>$Ø_D$=downflooding angle[°] | $<0.7 \cdot Ø_{O(R)}$<br>$<0.7 \cdot Ø_D$ | | | |

1) Only for hull length 6 m and over

3) Ice accretion need not be considered for additional notation “Ice reinforcement”.

## 4.5 Definitions and assumptions

## 4.6 Lightweight

The lightweight mLC is the weight of the craft including propulsion engine, permanent systems and equipment without crew, stores and cargo as defined in standard ISO 12217-1:2013.

### 4.6.1 Determination of lightweight and center of gravity

#### *4.6.1.1 Lightweight*

The craft lightweight to be determined by one of the following methods:

- Measurement of flotation position in a known loading condition, determination of the displacement corresponding to the flotation using the craft geometry information, and correcting the result to correspond to the lightweight according to ISO 12217:2013;
- Weighing the craft in a known loading condition, and correcting the result by calculation to correspond to the lightweight according to ISO 12217:2013;
- By calculation based on a sistership lightweight and known changes. With this method the allowed lightweight change is maximum 10% compared to the sistership.

#### *4.6.1.2 Vertical position of center of gravity*

The vertical center of gravity, VCG, to be determined by one of the following methods depending on the circumstances:

- Inclining test performed according to ASTM F-1321-90 or corresponding standard;
- Determining VCG by calculation based on the mass and VCG for individual components, and raising the resulting position above the keel by 5% of the craft side height;
- Determining VCG by calculation based on a sistership mass and known changes. With this method the allowed VCG change is maximum 10% compared to the sistership.

An inclining test must not be used for craft having a transverse metacentric height GM exceeding 5 m in light condition. Methods relying entirely on weight calculation or sistership information must not be used for craft having a GM less than 1.5 m in light condition.

#### *4.6.1.3 Longitudinal position of center of gravity*

The longitudinal position of center of gravity, LCG, to be determined by one of the following methods:

- Measurement of flotation position in a known loading condition, determination of the displacement corresponding to the flotation using the craft geometry information, and correcting the result to correspond to the lightweight according to ISO 12217:2013;
- Determining LCG by calculation based on the mass and LCG for individual components;
- Determining LCG by calculation based on a sistership mass and known changes.

### 4.6.2 Maximum load

The maximum load, ML, is the amount of load the craft is designed to carry. ML includes the following weights:

- The maximum number of persons (CL) times 85 kg;
- Their personal equipment;
- Stores and proviant;
- Cargo;
- Consumable liquids like fuel and water;
- Grey and black water
- Water ballast if carried
- Rafts or dinghies if carried
- Other weights not included in lightweight

NOTE! Icing on hull and superstructures is not included in the maximum load, but all rule requirements must be met with icing considered, if not stated otherwise.

In the loading conditions assessed in 4.6 the space required by people, and their center of gravity to be taken according to Chapter 1 item 12.1.

## 4.7 Loading conditions

### 4.7.1 Loading conditions to be assessed

The craft stability to be assessed in the following loading conditions:

- Minimum operating condition, short notation LC1
- Fully loaded, departure, LC2
- Fully loaded, arrival, LC3
- Offset load condition, OFFSET

Some requirements are independent of the loading condition, some are again tied to a certain loading condition. In the Tables 4.1-4.3 information is given under each requirement pointing out the load conditions that refer.

If it can be expected that the stability may be critical for the craft in other relevant loading conditions the stability needs to be assessed also for them. If applicable, icing weights need to be considered according to 4.7.4.

### 4.7.2 Minimum operating condition, loading condition LC1

In the minimum operating condition the following is included on top of the lightweight:

- the mass of the crew located at the highest steering position;
- 85 kg, if $L_H$ ≤ 8 m;
- 170 kg, if $L_H$ = 8...16 m; and
- 255 kg, if $L_H$ = 16...24 m.
- stores and equipment normally kept on board; and
- fuel 10% of the maximum capacity.

### 4.7.3 Fully loaded, departure, loading condition LC2

In the ”Fully loaded, departure”-condition the maximum load ML is on board, according to item 4.5.3. The load components are assumed to be in their intended places, see 4.7. If there is cargo, it has to be located according to Chapter 33.

### 4.7.4 Fully loaded, arrival, loading condition LC3

The condition ”Fully loaded, arrival” is similar to the departure condition 4.6.3, except for the amount of consumable stores which is carried 10 % of the capacity.

### 4.7.5 Offset load, loading condition OFFSET

The condition ”OFFSET” is similar to the arrival condition 4.6.4, except for that persons and deck cargo, if any, are located towards the side (see item 4.12).

## 4.8 Assumptions when assessing stability

### 4.8.1 Hull model for stability calculation

In the hull model used for the stability calculations the recesses, superstructures, and underwater appendages influencing the hydrostatics shall be included. Only items sufficiently watertight (see Chapter 3) and strong (see Chapters 10, 14, and 18, depending on the material used) may be considered.

The righting levers shall normally be calculated so the water surface in recesses is at the same level as the surrounding water at all heeling angles. In Design Category C and D the righting levers may be calculated assuming the following drain openings to be closed tight:

- Drain openings with non-return flaps or similar devices
- Drain openings whose combined area do not exceed three times the smallest drain area required by ISO 11812.

The assumption above may be used only for heeling angles smaller than the recess edge immersion angle.

### 4.8.2 Location of loading components

Liquids are assumed to be contained in their tanks.

The location of persons to correspond to the normal use of the craft. The mass and centre of gravity for persons are assumed to be taken from Chapter 1 item 12.1, unless the special mission of the craft gives reason to use different numbers.

For the location of cargo the guidelines in Chapter 33 shall be used.

### 4.8.3 Free surfaces in the tanks

The free surface effects in the tanks shall be considered if their combined reduction of GM exceeds 2 % with the tanks 10 % full.

### 4.8.4 Icing

When the ice that can form on hull and superstructure is considered, and always for craft having the Additional Notation ”Ice reinforcement” according to Chapter 39, the weight and distribution of the ice shall be as follows:

30 kg/m2 on open decks, and on structures located on these decks;

7.5 kg/ m2 on both sides of the craft projected side profile area above the water line;

Icing of other already mentioned surfaces is considered by increasing the projected side profile area 5 % on both sides.

## 4.9 The effect of recesses on stability

The effects of recesses on stability are assessed only for fully enclosed craft. The loading condition to assess is LC3, fully loaded at arrival, see 4.6.4.

For Design Category A and B craft the effect of recesses on stability shall always be assessed. Design Category C craft are assessed only if the craft does not fit any of the following alternatives:

- The combined volume of all recesses is maximum LH·BH·FM/40 m3, where FM is the average freeboard height at the recess, [m]
- The lowest freeboard to the recess coaming is less than LH/10 or 0.75 m, whichever is smaller;
- The stability range of the craft is at least 90°;
- The recess coaming height is maximum 3 % of its maximum width on at least 35 % of its circumference;
- The recess coaming height is maximum 12.5 % of its maximum width, and the drain openings located in the coaming bottom quarter have an area of at least 5 % of the coaming area.

- The drain opening areas per side are at least k·V, where V is recess volume in m3, and k is:
  - 0.09, if the drain openings are in the bottom quarter of the coaming
  - 0.16, if the drain openings are below the half height
  - 0.30, if the drain openings are located over the entire height of the coaming.

If none of the alternatives fits, the effect on the stability shall be assessed according to ISO 12217:2015 with the following clarification.

The edge over which water drains from or enters into the recess is assumed to be on a height where the effective cross section is 5 % of the recess volume, corresponding to the ISO 12217:2013 definition.

## 4.10 Reserve buoyancy

### 4.10.1 General

This requirement is intended to ensure that the craft has a sufficient weather tight volume above the water (reserve buoyancy) in order to carry a certain amount of overload in addition to the full load displacement. This requirement is not applied to craft having one compartment subdivision, see Chapter 38.

For rigid-bottom inflatables (RIB) the reserve buoyancy is determined according to standard ISO 6185.

For monohulls the requirement 4.9.1 is considered fulfilled if the freeboard measured to the lowest point of the deck, FMIN, is at least according to Table 4.1, assuming that the deck is continuous from side to side. Alternatively, and always if the previous interpretation is unsuitable because of for example a discontinuous deck, the assessment shall be based on determination of the actual volume.

For multihulls the reserve buoyancy shall always be based on the actual volume.

## 4.11 The buoyancy of the bow

The bow needs to have sufficient buoyancy. This is normally achieved with a raised deck or forecastle, the height of which is to be at least $F_{BOW}$ at a point forward of the fore perpendicular. From this point the forecastle can drop to the height $F_{min}$ on a distance $L_H/4$ aft of the bow. For Design Category A and B craft the forecastle needs to be weather tight up to the top. For Design Category C and D the freeboard at the bow can alternatively be taken to the upper edge of a weather tight bulwark.

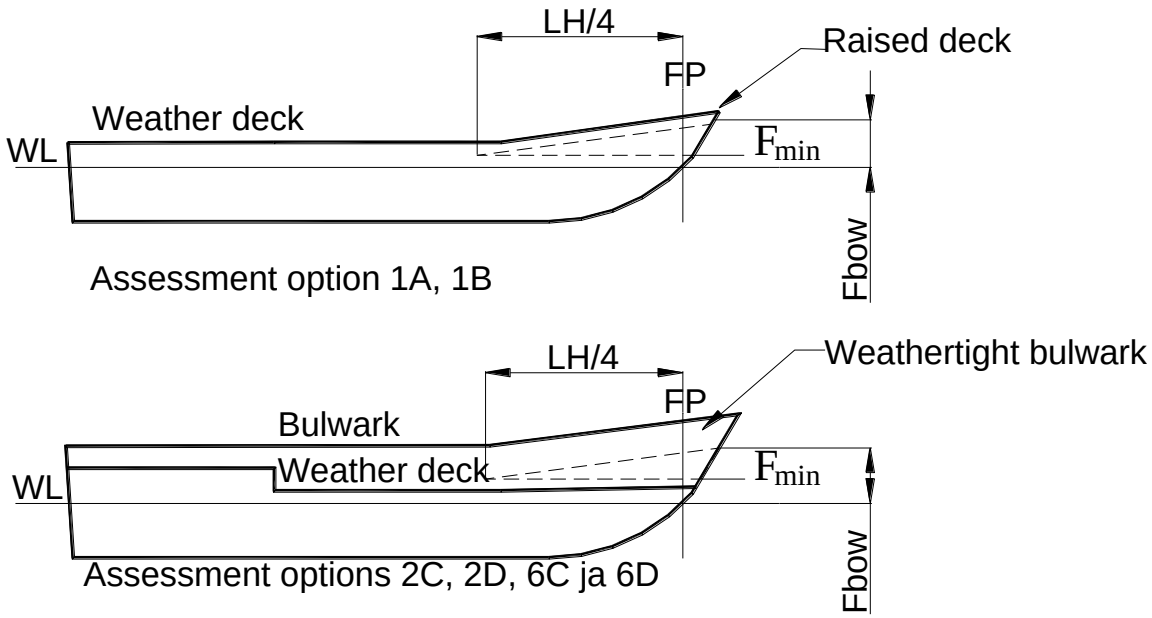


Figure 4.1: Bow height requirement $F_{BOW}$

### 4.12 Downflooding height (all craft)

The downflooding height of an opening, hD, is the lowest height from the waterline in fully loaded condition to any downflooding opening which cannot be closed weather tight, including the edge of recesses.

The required freeboard to a downflooding opening, hD, is given in Tables 4.1-4.4. Additional requirements for opening features are given in Chapter 3. Optionally, the required downflooding height may be determined using the method in ISO 12217-1:2015 appendix A

### 4.13 Heeling angle and residuary freeboard with offset load

The heeling angle, and residuary freeboard or downflooding angle shall be dertermined for all craft, and the results must meet the requirements in Tables 4.1-4.3.

#### 4.13.1 Definitions

The heeling angle with offset load, ØO, is the heeling angle resulting from the transfer of people and/or cargo on board to one side.

The residuary freeboard with offset load is the freeboard to the lowest downflooding opening at the heeling angle in question.

The downflooding angle is the heeling angle when water begins to flood into the weather tight parts of the craft. A more accurate definition can be found in the standard ISO 12217-1:2013

### 4.13.2 The loading condition when measuring heeling angle, and residuary freeboard or downflooding angle

Heeling angle and residuary freeboard with offset load is measured with the same amount of load as in the loading condition ”fully loaded, arrival” (see item 4.6.4). In comparison to the mentioned condition the difference is that persons and deck cargo are located as follows:

- persons or corresponding weights (85 kg each) are located as close to the crew area limits as possible, so that:
- the centre of gravity of the persons closest to the limit is 0.20 m from it;
- the centre of gravity of the persons are spaced 0.50 m;
- if the craft has decks narrower than 0.4 m, the weight is put in the centre of that part of the deck;
- the centre of gravity of the persons are assumed to be 0.10 m above the deck or seat; and
- the persons are placed so that the largest heel, or smallest residuary freeboard is achieved, considering general arrangement features like upper decks; and
- if deck cargo is included in the craft full load, the additional heel caused by its shift to one side shall also be considered according to Chapter 33 item 4.5.

A more accurate description of testing offset loads can be found in the standard ISO 12217-1:2013.

## 4.14 Maximum righting moment

In order to prevent too small craft from obtaining Design Category A and B, a requirement is given for the maximum righting moment. The required value, given in Table 4.1, depends on the Design Category, and the heeling angle at which the maximum GZ occurs.

## 4.15 The GZ-curve properties

If the heeling angle at which the maximum GZ value, ØGZmax occurs, is 30° or larger, the required GZ-value at 3° heel shall be at least 0.2 m.

If the heeling angle at the maximum GZ occurs, ØGZmax, is less than 30°, the requirement refers to the largest GZ value, GZMAX.

Irrespective of the heeling angle at which the maximum GZ occurs, the craft shall meet the requirement for stability range.

## 4.16 Rolling with wind and waves on the beam (weather criterion)

The purpose of the assessment is to ensure that the craft righting energy is at least equal to the heeling energy caused by the waves on the beam, when simultaneously a steady side wind is blowing.

The waves are assumed to cause rolling with the amplitude:

$Ø_R = 25+20/ V_D$ Design Category A (4.4)

$Ø_R = 20+20/ V_D$ Design Category B (4.5)

Where $V_D$ is the displacement volume in cubic meters.

The righting moment curve is limited by the smallest of the angles:

- Downflooding angle
- Capsizing angle
- 50°

The wind heeling moment, $M_W$ [Nm], is assumed to be constant at all heeling angles, and has to be determined with either of these formulas:

$M_{W1} = 0.53 \cdot A_{LV} \cdot h \cdot v_w^2$ [Nm] (4.2)

$M_{W2} = 0.30 \cdot A_{LV} (A_{LV}/ L_{WL}+T_M) \cdot v_w^2$

Where

$T_M$ [m] is the mean draught

$v_w$ = 28 m/s for Design Category A and 21 m/s for Design Category B

$A_{LV}$ [m2] is the lateral wind area, minimum 0.5·LH·BH

h = vertical distance btw centers of windage area and underwater lateral area, [m]

The righting and heeling moments are plotted as a function of the heeling angle in the same graph as shown in Figure 4.2. The craft meets the stability criterion provided area A2 is equal or larger than area A1.

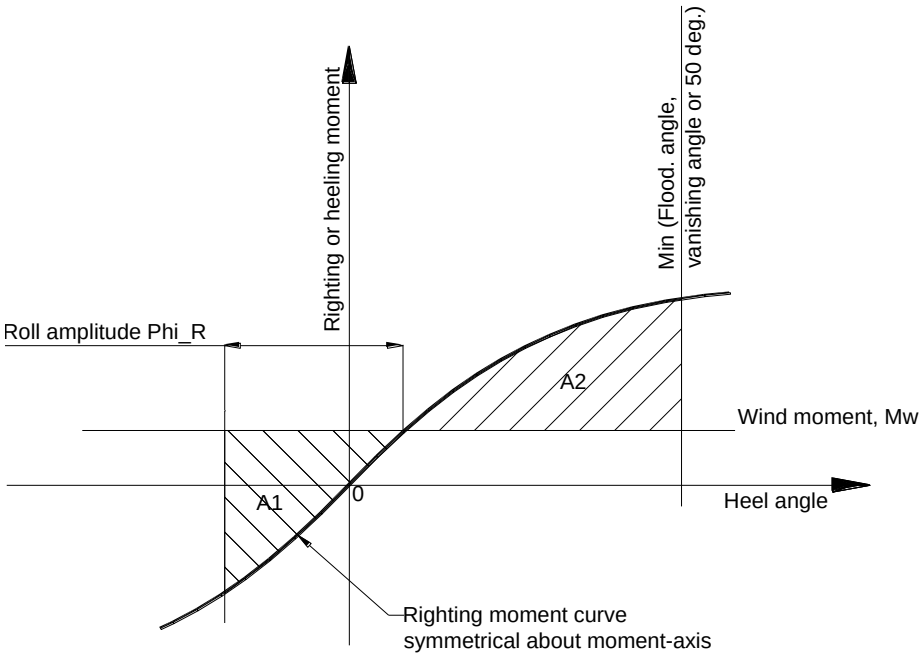


Figure 4.2: Rolling with wind and waves on the beam

## 4.17 Wind induced heel

This criterion ensures that righting moment of the craft is sufficient in strong beam wind. If the projected lateral windage area $A_{LV} < 0.5 \cdot L_H \cdot B_H$ in the loading condition LC3, it is not necessary to perform this check. Otherwise the procedure is:

Determine the wind induced heeling moment $M_W$ according to 4.15, but use the wind speed $v_w$ = 17 m/s for Design Category C and 13 m/s for design Category D.

The wind induced heeling angle $Ø_W$ is determined by comparing the heeling moment curve with the righting moment curve worked out for loading condition LC3.

The heeling angle $Ø_W$ must be less than 70% of the allowed heeling angle with offset load, and less than 70% of the downflooding angle as well.

## 4.18 Buoyancy when swamped

### 4.18.1 General

Remaining afloat when swamped means that a loaded and waterfilled craft remains afloat due to the buoyancy provided for this purpose, and stays approximately horizontal with a certain minimum stability. The requirements depend both on the used assessment option and on the type of flotation elements.

### 4.18.2 Types of flotation elements and their requirements

The required buoyancy volume may be comprised of air tanks, pontoons or foam filled floats, and also the craft structure.

*Air tanks* are water- and airtight compartments, contained within walls of FRP, metal, or other stiff material. It must be possible to remove condensed- and other water from the tanks through an inspection hatch or –opening, which can be closed tight. Air tanks shall be tested to 5 kPa pressure, and during 30 seconds the maximum allowed pressure drop is 1 kPa.

*Pontoons* are air filled floats with walls of thin, typically fabric reinforced polymer film, keeping the shape due to internal air pressure. Pontoon materials shall meet the requirements in the standard ISO 15372, and they have to be tested according to the same standard. Prefabricated pontoons shall be tested as follows according to standard ISO 6185:

- over pressure test, (ISO 6185-4 item 7.9)
- tightness test, (ISO 6185-4 item 7.9)
- test of pontoon attachment, (ISO 6185-4 item 7.14)

*Foam filled* floats contain cellular plastic foam. It has to be mechanically protected by hull structure, or have a protecting surface layer. The foam is to meet the requirements in:

ISO 6185-3:2014 item 5.7

### 4.18.3 Arrangements for buoyancy

Pontoons must be divided into at least five about equally large compartments, each volume within ± 20% of the average for all pontoon compartments.

Air tanks need to be divided into compartments based on their volume fraction of the required total buoyancy volume according to Table 4.4.

Table 4.4: The number of permanent air tanks in the hull versus Design Category

| **Volume fraction** | **Number of permanent air tank compartments** | | |
|---|---|---|---|
| | **B** | **C** | **D** |
| **≤ 50 %** | **2** | **2** | **1** |
| **> 50 %** | **3** | **2** | **2** |

### 4.18.4 Assessment of buoyancy

A buoyancy test has to be performed according to standard ISO 12217-1:2015. The floating position as well as stability in swamped condition with full load are assessed.

The buoyancy can also be verified by calculation. The permeability of the waterfilled compartments shall normally be 1, except for the engine space, where 0.85 may be used.

## 4.19 Multihulls susceptible to inversion

### 4.19.1 Susceptible to inversion

The requirements apply only to craft in Design Category C and D.

The craft is regarded susceptible to immersion if:

$h_C/B_H > 0.572$ while $V_D^{1/3} > 2.6$

$h_C/B_H > 0.22 \cdot V_D^{1/3}$ while $V_D^{1/3} \leq 2.6$

Where

$h_C$ is the lateral wind area centre above the waterline, [m]

$V_D$ is the displacement volume in light service condition [m³]

### 4.19.2 Requirements

Craft vulnerable to capsizing according to item 4.18.1 shall meet the following requirements:

- The craft shall, fully loaded, remain afloat swamped upside down according to ISO 12217-2:2013 item 7.12;
- There shall be an emergency exit which can be used while the craft is upside down according to item 7.13 in the same standard.

# 5 DECK ARRANGEMENT AND RECESSES

## 5.1 Purpose

The purpose of this chapter is to ensure that:

- The deck arrangement is laid out so green water coming on board drains back to the sea as quickly as possible;
- The recesses have proper size and location considering the craft reserve buoyancy and stability in relation to the Design Category; and
- The drain arrangements enable quick draining of the recesses; and
- Flooding of the craft weather tight spaces through openings in the recesses is avoided.
- NOTE! The effects of green water to stability is treated in Chapter 4!

## 5.2 References

In this chapter reference is made to the following documents:

- ISO 12217-1:2015 Small craft – Stability and buoyancy assessment and categorisation
- ISO 11812:2001 Small craft – Water tight cockpits and quick-draining cockpits
- International Load Line Convention 1966 with amendments

## 5.3 Documentation

For assessment of the requirements given in this chapter the following documentation is required:

- Deck arrangement;
- Volume of recesses;
- Drain opening location and size; and
- Sill heights for doors in recesses leading into the weather tight hull;
- Calculation of draining time, or test protocol

Most of the mentioned information can be given in the general arrangement drawing.

Handling of the green water coming on board

When applying the rules of this chapter it should be noted, that with different deck arrangements (see Chapter 2) the required level of water- and weather tightness varies. For open or partially protected craft it is assumed that water coming on board is led to the bilge, and drained overboard with bilge pumps. For fully enclosed craft and those provided with buoyancy for remaining afloat, the deck, superstructures, and recesses shall be designed so green water coming on board is efficiently drained back to the sea. The assessment is done according to standard ISO 12217-1, as explained in Chapter 4.

## 5.4 Definitions

### 5.4.1 Recesses

A recess is any part of the craft where water can collect, as a consequence of green water coming on board, heeling, heavy rain etc. For example, cockpits and deck areas surrounded by bulwarks are recesses.

### 5.4.2 Basic requirements for recesses

A quick-draining recess meets the requirements in standard ISO 11812 for the Design Category in question. A quick-draining recess shall have:

- bottom height above the waterline according to 5.7.1;
- draining arrangements according to 5.7.2;
- coaming height according to 5.7.8; and
- water tightness according to 5.7.9.

### 5.4.3 Watertight recess

A watertight recess shall have sill height according to 5.7.8 and water tightness according to 5.7.9. For fully enclosed craft the total volume of all watertight recesses must not exceed LH·BH·FM/40.

## 5.5 Requirements for deck arrangements

### 5.5.1 Weatherdeck arrangement

The weatherdeck (see definition in Chapter 2) arrangement shall ensure that green water coming on board does not remain on deck for a long period. Arrangements that prevent the water from draining back to the sea are not allowed.

### 5.5.2 Non-weather tight superstructures in fully enclosed craft

Superstructures not meeting the requirements regarding strength, water tightness, or closing arrangements for the location in question, are not allowed in design category A and B although the craft's stability would be sufficient without this superstructure. Alternatively, such superstructures could be fitted with drain openings having a capacity meeting the requirements for a recess in the same location, assuming that the recess coaming height is the same as the sill height for the required door.

## 5.6 Detailed requirement for recesses

The following requirements are based on the international standard ISO 11812. Only typical cases are presented, and in other cases the mentioned standard has to be applied.

### 5.6.1 Height of recess bottom above waterline

For quick-draining recesses the height of the recess bottom above the waterline has to be at least according to Table 5.1. The requirements in the table refer to recesses with straight bottoms. For recesses with other bottom configurations the standard ISO 11812 shall be applied.

**NOTE!** Achievement of the draining time in 5.7.2 may require a higher located bottom than given in Table 5.1.

**NOTE!** The reserve buoyancy requirement in Chapter 4 item 4.9 may also require a higher located bottom.

Table 5.1 Recess bottom height $H_{Bmin}$

| Design Category | A | B | C | D |
|---|---|---|---|---|
| $h_{Bmin}$ [mm] | 150 | 100 | 75 | 50 |

### 5.6.2 Maximum draining time

The recess maximum draining time is shown in Figure 5.1 as a function of the parameter kC, describing recess volume versus craft weather tight volume. The parameter kC is determined with Formula (5.1)

$$k_C = \frac{V_C}{L_H \cdot B_{MAX} \cdot F_M} \qquad (5.1)$$

Where $V_C$ [m3] is the recess volume and $B_{MAX}$ the craft maximum beam.

The draining time never must exceed:

- 2 minutes for Design Category A;
- 3 minutes for Design Category B;
- 4.5 minutes for Design Category C; and
- 5 minutes for Design Category D.

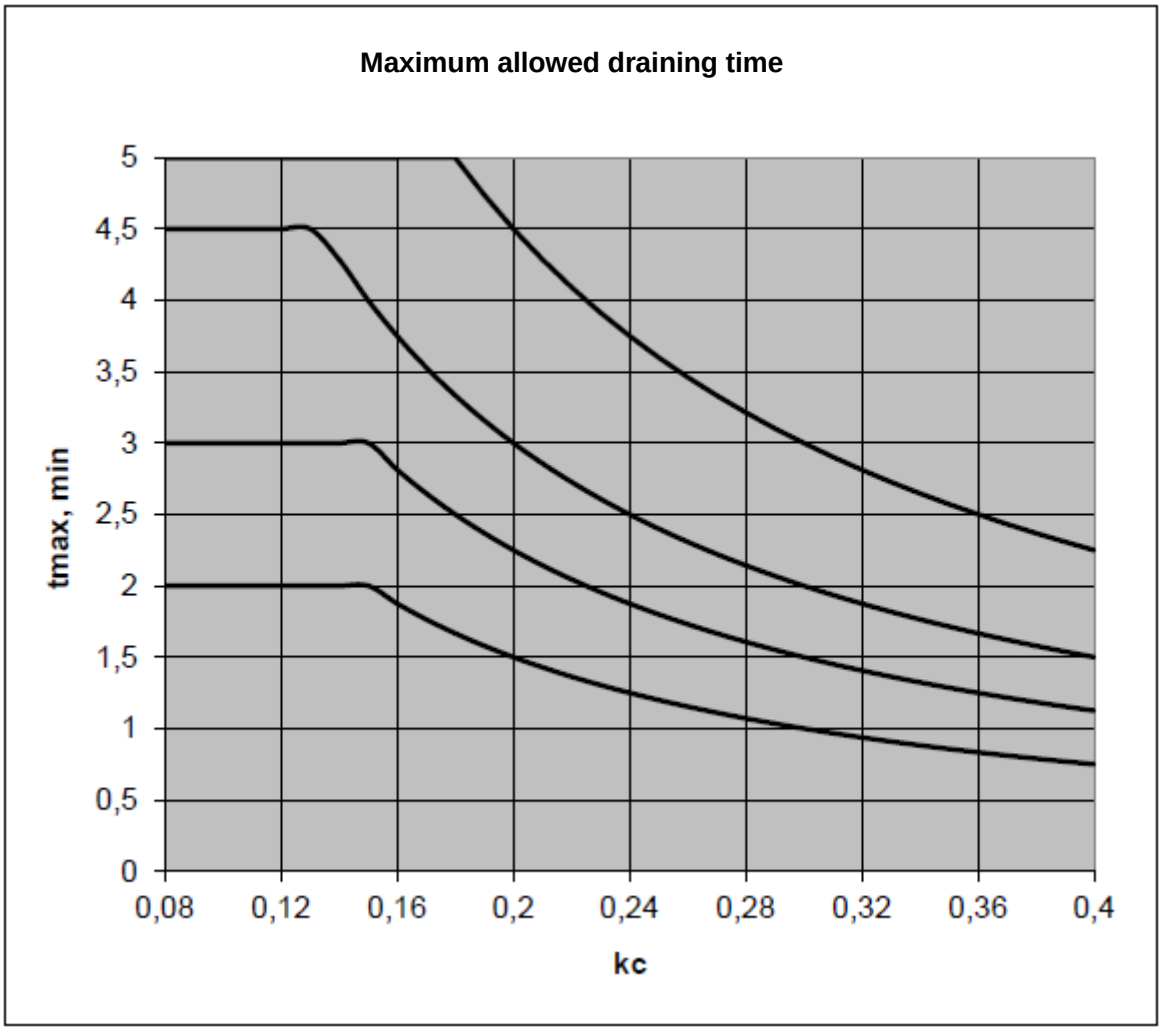


Figure 5.1: Maximum allowed draining time tmax [min] for quick draining recesses as a function of kC.

### 5.6.3 Area requirement for drain openings

The area for drain openings is to be such that the maximum draining time according to 5.7.2 is not exceeded. Compliance can be shown using the simple Formula (5.2) method, examples in Figure 5.2, performing a draining test, or the calculation method given in standard ISO 11812.

### 5.6.4 Example arrangement

In Figure 5.2 the area requirement is given for a maximum 1 m long drain tube above the waterline and fitted with a non-return flap. Areas shown in the example must be used only for recesses with over 0.4 m high coamings, tube outlet above the waterline, and tube length maximum 1.0 m. The outlet opening may have a non-return flap, but bends or other resistance increasing features are not allowed.

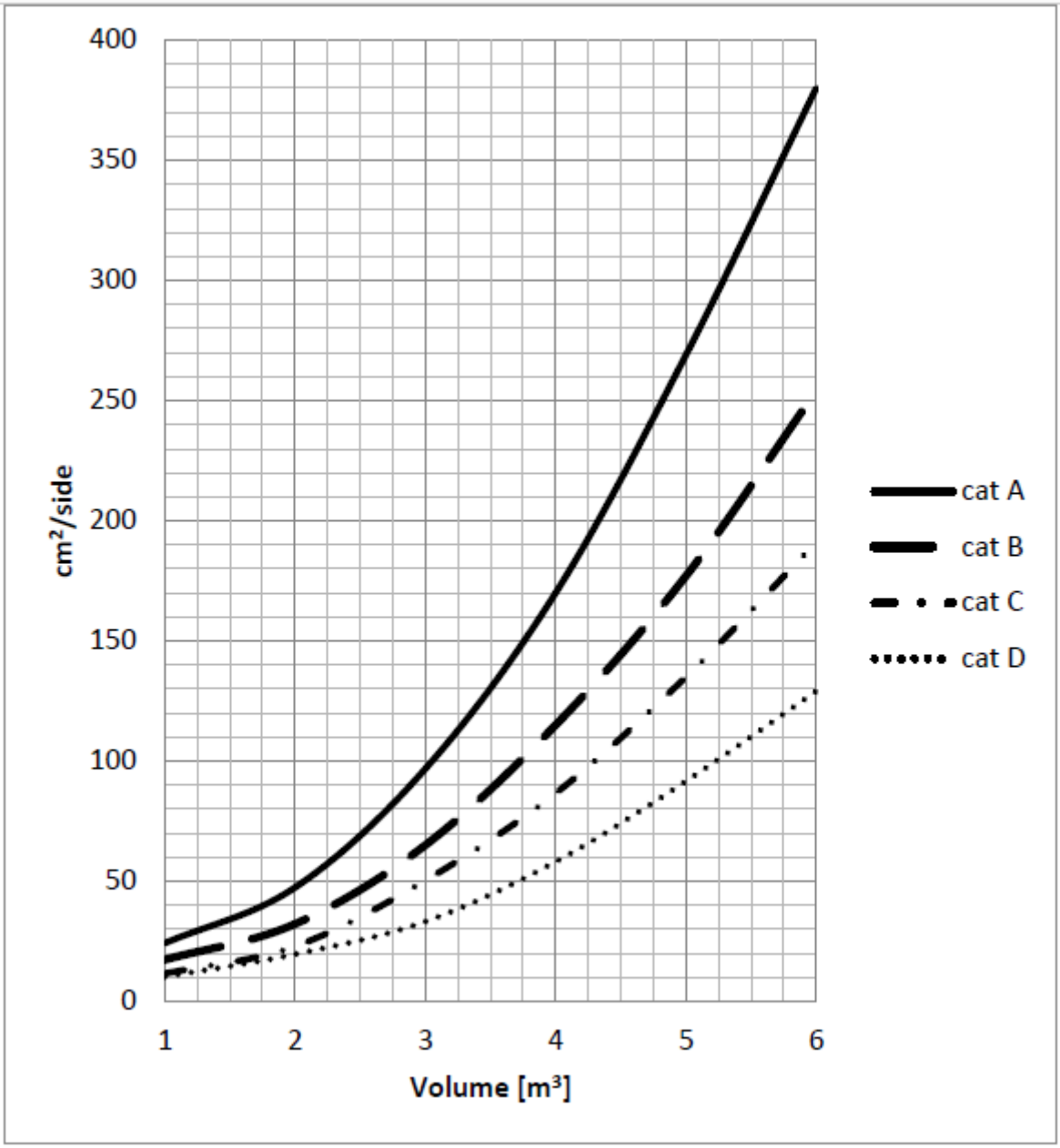


Figure 5.2. The minimum area per side for drain openings in recesses with over 0.4 m high coamings, when the drain tube length is less than 1 m, and outlet above water fitted with non-return flap.

### 5.6.5 Drain area per side

The required total drain area per side can be determined with the simple method in Formula (5.2) provided:

- The drains are evenly spaced along the deck edge;
- The drains' flow characteristics correspond to holes in a plate without tubes or other flow restricting features;

- In loaded condition the height of the drains above the waterline is at least the same as the freeboard requirement in Chapter 4 item 4.11.

$A = k \cdot V_C$ [cm²] (5.2)

Where $V_C$ [m³] is the recess volume according to standard ISO 11812, normally the deck area times the coaming or bulwark minimum height, and coefficient k to be

- 200 for Design Category A;
- 100 for Design Category B;
- 50 for Design Category C; and
- 20 for Design Category D.

### 5.6.6 Draining test

In all cases draining time compliance can be demonstrated by a physical draining test. The recess is filled with water, and the draining time is measured. If the time does not exceed the requirement in item 5.7.2 the recess is compliant in this respect.

Alternatively, the required drain area can be determined by calculation according to standard ISO 11812.

### 5.6.7 Number and location of drains

Recesses shall have at least one drain opening per side. Particularly for working decks and other big recesses the drain location must ensure efficient draining considering the recess volume distribution, and a possible trim change for the craft due to a filled recess.

### 5.6.8 Sill heights

The closing appliances leading into the weather tight hull shall have sill heights meeting the requirements for doors or hatches given in Chapter 3.

### 5.6.9 Water tightness

Closing appliances in the bottom or side of recesses shall at least meet the requirements in Chapter 3.

# 6 PREVENTION AND CONTROL OF LEAKS, BILGE SYSTEMS

## 6.1 Purpose

The purpose of this chapter is to ensure that:

- The watertight spaces are arranged so that the consequences of probable damage are minimized;
- There is a draining system sufficient for the craft size and use.

## 6.2 References

In this chapter the following documents are referred to:

- ISO 12217-1:2015 Small craft – Stability and buoyancy assessment and categorisation
- ISO 15083:2003 Small craft – Bilge pumping systems
- ISO 8849:2003 Small craft -- Electrically operated direct-current bilge pumps

## 6.3 Documentation

For assessment of the requirements given in this chapter the following documentation is required:

- the watertight subdivision;
- the structure of watertight bulkheads including WT doors and penetrations;
- the location of openings leading to watertight compartments, their closing arrangements;
- other possible flooding control arrangements
- the location of drainage pumps, manufacturer/type notation and capacity;
- location of high bilge level alarms;
- drainage lines and their through-hulls as well as used materials
- test protocol for bilge pumping capacity

## 6.4 Requirements

A summary of the requirements is shown in Table 6.1. The details are treated separately.

The requirements for ”One compartment subdivision” are given in Chapter 38.

## 6.5 Leak control

Sufficient safety level in case of a leak can be provided in one of three ways. They are:

- limited unsinkability, which is the compulsory minimum level for all craft types, except those assessed according to the alternatives 3B, 2C and 3D (craft with buoyancy for remaining afloat, see Table 4.2);
- one compartment subdivision as an alternative to limited unsinkability, in case the Additional Notation ”One Compartment Damage Stability” is chosen.
- flotation in swamped condition for craft assessed according to the alternatives 3B, 2C, and 3D.

The details for these are explained in items 6, 7, and 8.

## 6.6 Limited unsinkability

### 6.6.1 Principle

The risk of flooding the hull as a consequence of damage shall be minimized as far as practically possible. ”Limited unsinkability” means that the spaces particularly vulnerable to damage are protected with local watertight subdivision or other damage tolerant arrangements. The aim is to limit the leak so much that the craft does not sink or capsize because of the damage.

### 6.6.2 The means for achieving limited unsinkability

Depending on the assessment option for the undamaged craft, the watertight subdivision, the underwater appendages, and possible buoyancy for remaining afloat, the following arrangements for improved unsinkability are required according to Table 6.1:

- Collision bulkhead to be installed between 0.05 · LWL and 0.15 · LWL aft of the forward perpendicular. In the vertical direction the collision bulkhead shall extend from the bottom up to weather deck (see definition in Chapter 1)
- An alternative to the previous item could be a collision zone of hard polymer foam or equal, extending at least 0.05 · LWL aft from the forward perpendicular. The vertical extent to be the same as for a corresponding collision bulkhead.
- In craft with unprotected rudders and/or propellers, the bottom above them should be subdivided, or have other precautions taken for limiting a possible leak, in case rudders or propellers should damage the hull in connection with grounding.
- Engine space bulkheads watertight at least to the deck above the full load waterline in fully enclosed craft, and up to 100 mm above the full load waterline in open or partially protected craft.
- For cargo hold bulkheads the same water tightness requirements as for the engine space refer.
    - Here the forward perpendicular to be taken as the intersection of the full load waterline with the stem.

- Table 6.1 Summary of requirements for leak control

| Assessment option (see Chapter 4) | | 1 | | 2 | | 3 | | 4 | | 5 | |
|---|---|---|---|---|---|---|---|---|---|---|---|
| Design Category | | A | B | C | D | C | D | C | D | C | D |
| Limited unsinkability | Collision bulkhead | $L_H$ > 15 m | | | | | | $L_H$ > 15 m | | | |
| | Bottom above propeller and rudder | x | x | x | x | | | x | x | x | x |
| | Engine space bulkheads | x | x | x | x | x | x | x | x | x | x |
| | Cargo hold bulkheads | x | x | x | x | | | x | x | x | x |
| One compartment subdivision 1) | | x | x | x | x | | | | | | |
| Buoyancy for flotation in swamped condition | | | | | | x | x | x | x | | |

1) Additional Notation see Chapter 38. Alternative to ”Limited unsinkability”

## 6.7 Draining arrangements for the bilge

### 6.7.1 General

The bilge draining arrangements shall enable removal of water entering during normal use, and controlling limited leaks thereby retaining the craft seaworthiness. The mastering of major leaks, for example after grounding or collision, is not covered within these rules. For craft with Additional Notations, requirements for passenger transport can be found in Chapter 34.

### 6.7.2 Compartments to be drained

In the following, the term compartment means a watertight space separated by watertight bulkheads, but also other non-watertight spaces where water can collect and, if filled up to the waterline in the minimum operating condition (loading case LC1), water will not lea into other compartments.

The bilge draining system shall be able to pump out all compartments except tanks for the storage of liquids, or compartments used as flotation elements.

Except for engine spaces, small compartments having a total underwater volume of less than 10 % of the (single) hull displacement in minimum operating condition (loading case LC1), can be drained to an adjacent compartment through a drain opening with shut-off valve, provided the volume and location for

the compartment in question does not endanger the safety of the craft. Alternatively, small compartments may be drained with a portable bilge pump.

Except for superstructures, spaces above the waterline providing reserve displacement below the working deck, shall have the possibility to drain to compartments connected to the bilge draining system.

Water collecting in compartments shall drain to the bilge pump or emptying point.

All bilge pumps and bilge level indicators shall be functional at ±10° heel, the amount of remaining water to be less than 10 % of the compartment displacement in the light service condition, and maximally 500 liter.

In compartments where the above requirement cannot be met, additional bilge pumps are required, located so that the compartment can be emptied also at 10° heel.

When there are several pumps in a compartment the pump capacity requirement refers for the compartment.

### 6.7.3 Requirements for the bilge draining system

The requirements for the bilge draining system depend on the craft length, displacement, Design Category, subdivision, risk of flooding, and craft concept.

Except for the small compartments mentioned in 6.7.2, it shall be possible to pump out all compartments with the main bilge draining system.

In the engine space and in compartments with through-hull connections, a reserve bilge draining system is required according to Table 6.2.

In craft with buoyancy for remaining afloat the main bilge draining system may, with the exception of the engine space, be manual and operated from the working deck, having a capacity corresponding to the secondary draining system.

In compartments with inherent risk of flooding, indication for high bilge level is required.

The bilge system discharge line must not be connected to or other systems such as

the engine cooling system discharge.

Table 6.2 Summary of the requirements for bilge draining systems

| Design Category | BCD | AB | CD | CD |
|---|---|---|---|---|
| Craft Concept | Flotation buoyancy | Fully enclosed | Fully enclosed | Open or partially protected |
| Main bilge draining system in all compartments (mechanical or electrical pumps) | x[M)] | x | x | x |
| Secondary bilge draining system, (manual or electrical pumps) | x[B)] | x | x[C)] | x |
| Engine space backup bilge draining system<br>(engine driven pump) | | $L_H$ > 15 m | | |
| High bilge water level alarm in engine space | x | x | x | x |
| High bilge water level alarm in compartments with through-hull fittings or weathertight closing appliances below loaded waterline. | | x | x[C)] | x |

x[M]) Manual bilge pump with the reserve pump capacity allowed for main bilge draining system, with the exception of engine space bilge pump
x[C]) Only Design Category C craft
x[B]) Only Design Category B craft engine space

### 6.7.4 Main bilge draining system

The main bilge draining system shall consist of a stationary electrical or mechanical pump, enabling pumping out all compartments through pipelines;

Craft with flotation buoyancy are exceptions, for them a manual bilge pump with reserve pumping capacity is allowed for emptying the compartments. Their engine space, however, requires a powered pump.

The pipelines shall be arranged so any flooded compartment can be pumped out with the required capacity in all loading conditions, irrespective of trim or heel changes caused by the flooding, and high bilge level indicators always remaining fully operative.

The pipeline system shall be sized for the required pumping out capacity in Figure 6.1.

Alternatively, each compartment can have its own pump, connected to common or separate pipelines.

Bilge pumps may be used for other purposes, such as fire extinguishing, but not for pumping flammable fluids.

All main bilge pumps shall be operable from the steering position, except for the manual pumps used in craft with flotation buoyancy.

For fully enclosed craft in design category A or B with a hull length exceeding 15 m, there shall be two independent main bilge pumps in the engine space.

Bilge pumps may be automatic provided there is no risk of transferring polluting substances into the environment.

The capacity requirement for the main bilge draining system is met if the pump nominal output according to standard ISO 8849 is at least in conformity with Figure 6.1 against a back pressure of 1 m hydraulic water head, while considering the requirements in 6.7.6.

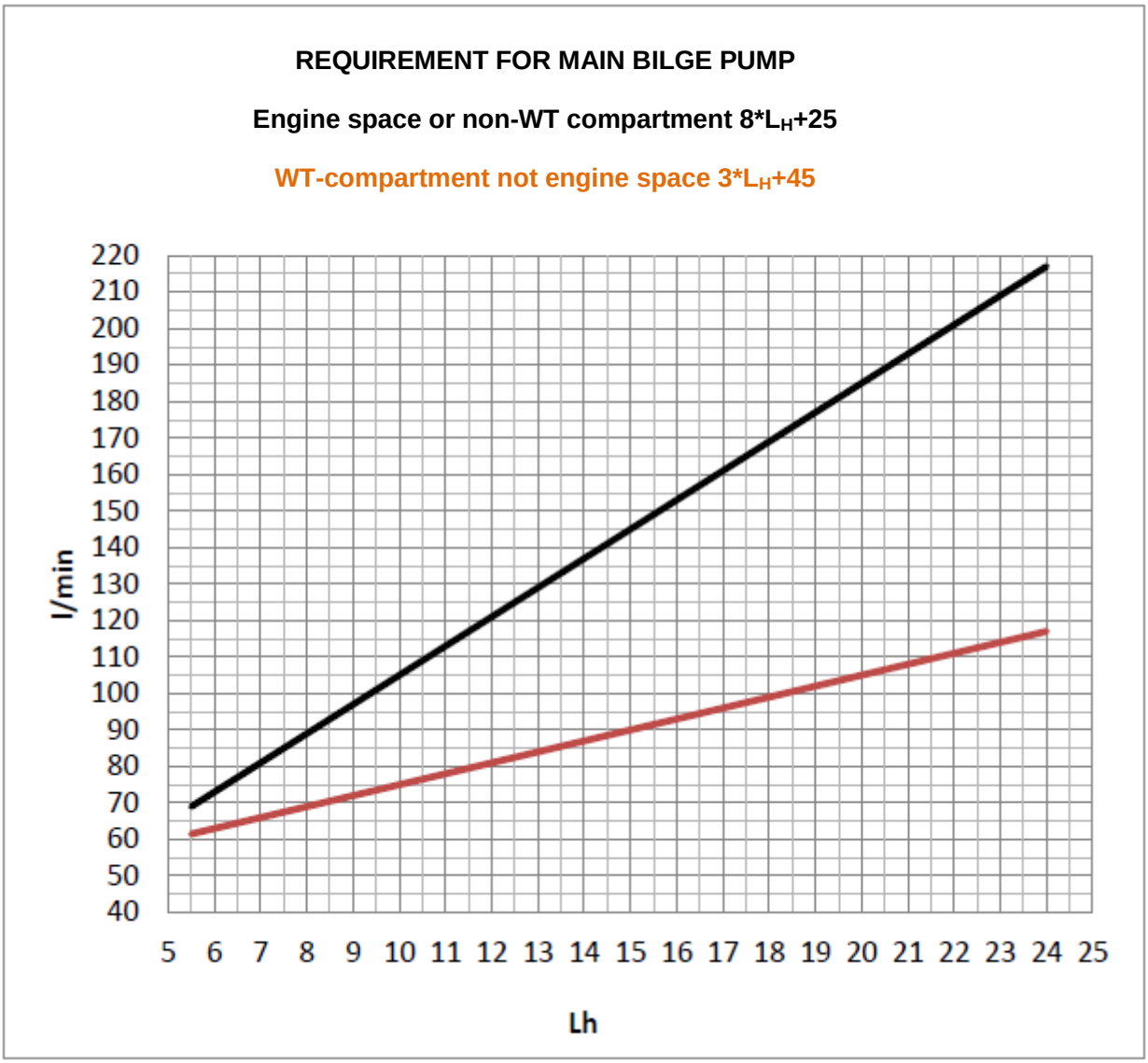


Figure 6.1: Minimum pumping capacity requirement [l/min] for main bilge pump as a function of hull length LH

### 6.7.5 Secondary bilge pumping system

For the engine space, and the compartments with through-hulls below the fully loaded waterline, there shall be a secondary bilge pumping system, completely separate from the main bilge pumping system, according to Table 6.2.

The secondary pump shall be operable outside the compartment.

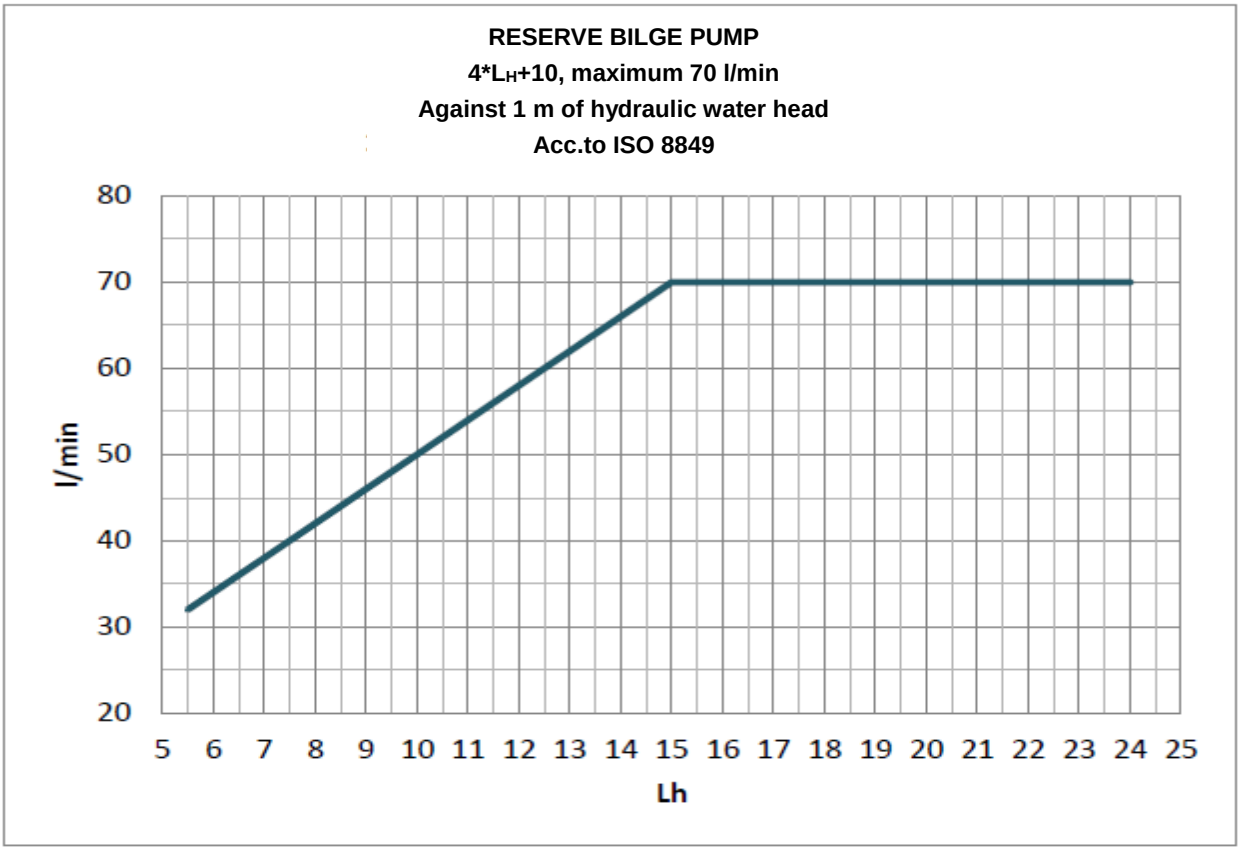


Figure 6.2: Minimum reserve pump capacity requirement [l/min] for bilge pumping as a function of hull length LH

### 6.7.6 Measurement of bilge pumping capacity

The pump output shall be measured at the hull outlet or from a corresponding arrangement.

For electrical pumps the output is measured with the battery charging system connected.

The measured bilge pump output at the hull outlet shall be at least 33% of the required nominal capacity given in this chapter (Figures 6.1 and 6.2).

The measured result must not influence the capacity requirement towards a reduction of

capacity.

### 6.7.7 Multihull bilge draining arrangements

For multihulls each hull should have bilge draining arrangements corresponding to those required for monohulls.

For compartments which are part of the reserve displacement above the loaded waterline, except for the superstructure, the emptying of water shall be arranged by letting it drain to compartments lower down which are part of the main bilge draining system. For example, an enclosed bridge between the hulls is such reserve displacement.

For multihulls the sum of the small compartment (see 6.7.2) volumes in one hull shall be maximum 10% of the light service displacement (LC1) for this hull, and maximum 500 liter.

### 6.7.8 Alarm for high bilge water level

All craft shall have alarm for high water level in the engine space.

In other compartments where there is a risk of water intrusion through damaged or accidentally open underwater through-hulls, openable hull windows, hatches without coamings on weather deck, or other similar arrangements which in open position may let in water, there shall be alarm for high bilge water level according to Table 6.2.

Bilge alarm is not required in small compartments (see 6.7.2).

A visual high bilge level indication shall be visible at the steering position.

The indication can be combined with the bilge pump float actuator in compartments where there is no risk of transferring polluting substances into the environment.

### 6.7.9 Material specifications for bilge draining systems

The tubing and hoses used in bilge draining systems shall have a safe working temperature of at least 80 °C.

Hoses used for bilge draining shall stand at least 50 kPa (0.5 bar) vacuum without collapsing, and be oil resistant, except for fire pump discharge hoses.

Hoses on deck shall be UV-resistant.

Fire pump discharge hoses and tubing shall have a working pressure higher than the pump discharge pressure.

For craft over 15 m hull length in Design Category A and B bilge system hoses and non-metallic discharge tubing in the engine space shall meet the requirements in ISO 7840 or ISO 15540 for short term fire resistance.

The system parts must not be connected so this creates galvanic action.

### 6.7.10 Strainers for suction hoses or bilge pumps

The suction hose for manual bilge pumps is to be fitted with a strainer if the compartment is vulnerable to the collection of trash or oil.

For powered pumps there shall always be a strainer preventing trash from entering the pump.

The suction hose intake strainer shall be easily accessible for cleaning in compartments vulnerable to collecting trash or oil, such as:

- engine spaces;
- public spaces, and passages between such spaces;
- open spaces, and other spaces connecting to them; and
- cargo spaces

The strainers shall be accessible for cleaning in spaces where there is no risk of trash ending up in a suction hose or bilge pump, as for example in weather tight tanks, through which there is no traffic to other spaces.

# 7 DESIGN PRESSURES AND LOADS

## 7.1 Objective

This chapter gives the design pressures and loads for the dimensioning of the structural strength of scantlings. The level of the loads is determined on the basis of craft size, design category, speed and vertical acceleration at the upper limit. Only design loads related to normal use of the craft are included. Design loads for craft running through ice-covered waters are provided separately in Chapter 39. At this point, only design loads for mono-hull craft are included.

## 7.2 References

The load determination model presented herein is based on the international standard ISO 12215-5:2008 Small craft – Hull construction and scantlings – Part 5: Design pressures for monohulls, design stresses, scantlings determination.

The multihull bridge structures design pressure and global loads are based on ISO/WD 12215-7 Small Craft – Scantlings – Part 7: Multihulls.

The fastening of RIB-pontoons to the rigid hull is assessed using ISO 6185-3:2014 ja ISO 6185-4:2011.

## 7.3 Principles

The loads as determined in this section are to be used with the calculation formulae in Chapters 10, 14 and 18.

### 7.3.1 Global loads

Global loads may be significant in multihulls, but also in monohulls in the case of small hull depth, unfavourable weight distribution, etc. The effect of global loads shall be taken into account as required in chapters 8, 12 and 14.

### 7.3.2 Local loads

The safety against loads from minor groundings, launching, etc., is in general considered satisfactory if the requirements for keel, stem, chine, bulwark and panels are complied with.

### 7.3.3 Extension of loads

The bottom design pressure to be used in the scantlings formulae in chapters 10, 14 and 18 extends in the vertical direction up to limit of the bottom and the side. The limit between bottom and side is for displacement speed up to the waterline in fully loaded condition. In planing speed

the limit between bottom and side is at the chine provided the deadrise is at most 20 degrees. If the deadrise exceeds 20 degrees, as it usually does in the bow, the limit between bottom and side is at the

waterline in fully loaded condition. For craft without a pronounced chine, the limit between bottom and side at planing speed is found at the 50-degree tangent, see Figure 7.1.

Above this limit, the side shell design pressure shall be used in the dimensioning. The top limit of the side is the weather deck for fully enclosed craft and the rail for open craft. Any higher structural parts (gunwale) shall be dimensioned for minimum pressure as per the formula 7.10.

If the panel is completely within one area, the design pressure is determined at the geometric centroid of the panel, or at the mid-span of the stiffener. If the panel extends on several areas, the design pressure is determined according to ISO 12215:2008 clause 6.2.5

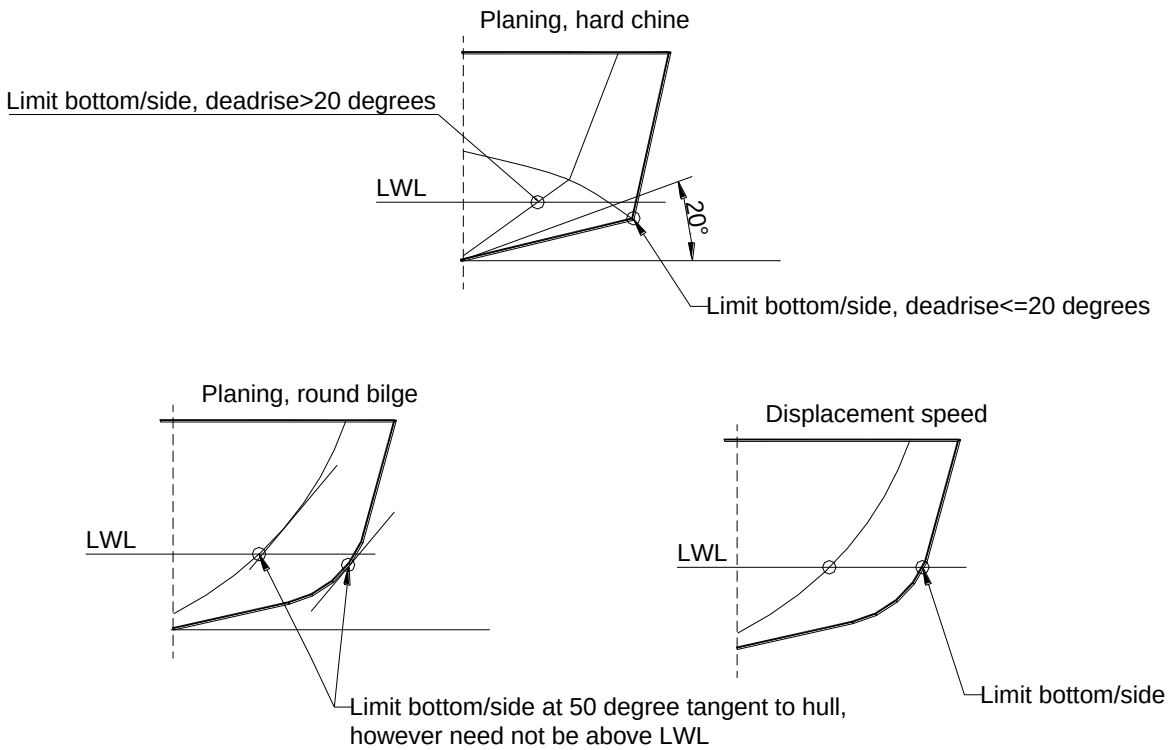


Figure 7.1. Limit between bottom and side pressure.

## 7.4 Bottom design pressure

The bottom design pressure is to be determined for non-planning mode, and, if the speed of the craft fully loaded exceeds 5·√LWL [kn], also at maximum speed. The design pressure to be used for determining bottom scantlings shall be the greater of these pressures.

The bottom design pressure PBM, is the greatest of the pressures given by formulae 7.1-7.3:

$$P_{BMD} = P_{BMDBASE} \cdot k_{AR} \cdot k_{DC} \cdot k_L \text{ [kPa]} \quad (7.1)$$

$$P_{BMP} = P_{BMPBASE} \cdot k_{AR} \cdot k_L \text{ [kPa]} \quad (7.2)$$

$$P_{BMMIN} = 0{,}45 \cdot m_{LDC}{}^{0{,}33} + 0{,}9 \cdot L_{WL} \cdot k_{DC} \text{ [kPa]} \quad (7.3)$$

Where

$$P_{BMDBASE} = 2{,}4 \cdot m_{LDC}^{0{,}33} + 20 \text{ [kPa]} \quad (7.4)$$

$$P_{BMPBASE} = 0{,}1 \cdot \frac{m_{LDC}}{L_{WL} \cdot B_C} \cdot \left(1 + k_{DC}^{0{,}5} \cdot n_{CG}\right) \text{ [kPa]} \quad (7.5)$$

$$n_{CG} = 0{,}32 \cdot \left(\frac{L_{WL}}{10 \cdot B_C} + 0{,}084\right) \cdot (50 - \beta) \cdot \frac{V^2 \cdot B_C^2}{m_{LDC}} \text{ [g]} \quad (7.6)$$

And

| | |
|---|---|
| $k_{DC}$ | Design category factor, see Table 7.3 |
| $k_L$ | Longitudinal pressure distribution factor, see 7.11.3 |
| $k_{AR}$ | Area reduction factor, see 7.11.2 |
| β | Deadrise at 40% of $L_{WL}$ from stern, degrees |
| V | Maximum speed at full load, kn, minimum 5·√ $L_{WL}$ |

$B_C$ is the distance between chines at 40% of $L_{WL}$ from stern, for multihulls the sum of the waterline beams.

If the dynamic load factor, $n_{CG}$, according to formula (7.6) exceeds 3,0, the value obtained by formula (7.7) shall be used as $n_{CG}$ in formula (7.5).

For multihulls, the dynamic load factor shall always be determined using formula (7.7), however, $n_{CG}$ shall never be taken as less than 1,5.

$$n_{CG} = 0{,}5 \cdot \frac{V}{m_{LDC}^{0{,}17}} \text{ [g]; min 3,0; max 7,0; for multihulls min 1.5} \quad (7.7)$$

## 7.5 Side design pressure

The side design pressure is to be determined for non-planing mode, and when speed exceeds 5·√LWL, also for the greatest speed in the loaded displacement condition. The design pressure to be used in the scantling calculations shall be the greater of the pressures. Bulwarks above weather deck shall be dimensioned using the pressure obtained from formula 7.10.

$$P_{SMD} = [P_{DMBASE} + k_Z \cdot (P_{BMDBASE} - P_{DMBASE})] \cdot k_{AR} \cdot k_{DC} \cdot k_L \text{ [kPa]} \quad (7.8)$$

$$P_{SMP} = [P_{DMBASE} + k_Z \cdot (0{,}25 \cdot P_{BMPBASE} - P_{DMBASE})] \cdot k_{AR} \cdot k_{DC} \cdot k_L \text{ [kPa]} \quad (7.9)$$

$$P_{SMMIN} = 0{,}9 \cdot L_{WL} \cdot k_{DC} \text{ [kPa]} \quad (7.10)$$

$P_{BMD\ BASE}$ = Bottom base pressure as per the formula (7.4)

$P_{DM\ BASE}$ = Deck base pressure as per formula (7.12)

$k_Z$ = Vertical pressure distribution factor, see (7.11.4)

$k_{AR}$, $k_{DC}$ and $k_L$ as defined in 7.4

## 7.6 Design pressure for decks

Design pressure for weather decks not used for transport of cargo shall be determined by formula 7.11. For sheltered decks, not intended for cargo, the design pressure shall be 5 kPa. For decks intended for cargo, the design pressure shall be the greater value from formulae 7.11 or 7.13.

$$P_{DM} = P_{DMBASE} \cdot k_{AR} \cdot k_{DC} \cdot k_L \quad \text{[kPa]} \quad (7.11)$$

$$P_{DMBASE} = 0{,}35 \cdot L_{WL} + 14{,}6 \quad \text{[kPa]} \quad (7.12)$$

$$P_{DMCARGO} = 10 \cdot Q \cdot n_{CG} \quad \text{[kPa]} \quad (7.13)$$

Where:

$k_{AR}$, $k_{DC}$ and $k_L$ as defined in 7.4

Q Amount of cargo per square meter, t/m2

## 7.7 Design pressure for superstructures

Design pressures for superstructures are based on the design pressure for decks and shall be taken according to formula 7.14

$$P_{SUPM} = P_{DMBASE} \cdot k_{DC} \cdot k_{AR} \cdot k_{SUP} \text{ [kPa]; min 5 kPa} \quad (7.14)$$

Where:

$P_{DMBASE}$ is calculated using formula 7.12

$k_{SUP}$ 1,00 for surfaces facing forward;
0,67 for surfaces faces to the side
0,50 for surfaces aft
0,50 for horizontal surfaces ≤0,8 m above deck without cargo
0,35 for horizontal surfaces >0,8 m above deck without cargo

Other factors as defined in 7.4

The design pressure for superstructures intended to carry cargo shall be determined as for cargo decks.

## 7.8 Watertight bulkheads

The design pressure for watertight bulkheads is the hydrostatic pressure which occurs on either side of the bulkhead when the compartment is flooded. This pressure shall be calculated by formula 7.15.

$$P_{WB} = 7 \cdot h_b \text{ [kPa]} \qquad (7.15)$$

Where

$h_B$ is the water head determined as follows:

- For panels 2/3 of the height of the bulkhead [m]
- For vertical stiffeners 2/3 of the stiffeners length, m
- For horizontal stiffeners its distance from the upper edge of the bulkhead, m

## 7.9 Design pressure for integral tanks

The design pressure for integral tanks is determined by formula 7.16.

$$P_{TB} = 10 \cdot h_b \text{ [kPa] always minimum 20 kPa} \qquad (7.16)$$

Where $h_B$ is the pressure head measured as in 7.8

## 7.10 Design pressure for multihull wet-decks

The design pressure of multihull wet-decks PWD applies to all structure above the waterline at full load between the demihulls, including the inside topsides of the demihulls.

$$P_{WD} = 3 \cdot n_{CG} \cdot m_{LDC}{}^{0,33} \cdot k_{DC}{}^{0,5} \cdot k_l \cdot k_{ZWD} \cdot k_{AR} \qquad (7.17)$$

Where

$$k_{ZWD} = \left(\frac{0,06 \cdot L_{WL}}{z_{WD}}\right)^{1,2} \qquad \text{[min 0,5 < } k_{ZWD} \text{ < 2,0 max]}$$

And

$z_{WD}$ = vertical distance from the loaded waterline to the center of the panel or stiffener in question, [m]

## 7.11 Global loadcases for multihull craft

Global loads shall be taken into account for monohulls if the beam/length ratio exceeds the following value:

$B_H/L_H > -0{,}013 * L_H + 0{,}55$ (7.18)

*Load case 1. Diagonal load in quartering seas*

The load case simulates a situation, where the vessel sails on an obique course relative the waves, and thereby momentarily is supported by two wave crests, one at the bow at one hull and one at the stern of the other hull.

$$M_{TD} = k_{DC}{}^{0,5} \frac{m_{LDC}}{1000} * (9{,}81 \cdot n_{CG}) * 0{,}063 \cdot \sqrt{L_{WL}{}^2 + B_{CB}{}^2} \text{ [kNm]} \quad (7.19)$$

Where

$B_{CB}$ = distance between centrelines of demihulls

*Load case 2. Load corresponding to the righting moment.*

A vertical load, acting at one hull, which is the smaller of the following:

- The buoyancy force when the hull is immersed, acting at its center of buoyancy;
- A vertical force corresponding to the greatest righting moment in the loading case LC2

If the bridge structure is shorter than 0,4·LH, also other global loadcases as defined in ISO 12215-7 might need to be checked.

## 7.12 Forces on transoms for high-power outboard motors

In Table 7.1 is presented design forces, based on seatrials, for transoms of planing boats in rough seas.

Strength assessment of the transom shall be made in load cases I, II and III for boats if:

- The engine power exceeds 100 kW; and
- The power factor $C_{PM}$ exceeds 1,0

Load Case I: Simulates the situation where the air-borne craft lands at the next wave crest, when the gravity of the outboard motor induces a backward force on the transom.

Load Case II: Simulates the situation where the air-borne craft lands at the next wave through, when the craft retards and the propulsion simultaneously is acting forward.

Load case III: Simulates the situation after the wave impact, when the propulsion acts with full force.

For craft with schock-mitigating seats, the forces $F_X$, $F_Z$ and the moment $M_Y$ shall be multiplied by a factor 1,2

Table 7.1. Design forces and moments for outboard transoms

| **Formula** | | **Description** |
|---|---|---|
| **$F_X$** | $C_{PM}$ * 0,42 $P^{0,7}$ | Forward force parallel to keel, one engine [kN] |
| **$F_Z$** | $C_{PM}$ * 0,10 $m_m$ | Vertical force, one engine [kN] |
| **$M_Y$** | $C_{PM}$ * 0,36 $P^{0,7}$ | Moment at axis of rotation due to mass and propulsion forces, one engine [kNm] |
| joissa | | |
| $C_{PM}$ | $0,43(50-\beta)*(P_{TOT}^{0,5}/m_{MT}^{2/3})$ | Power factor based on power/weight |
| $m_m$ | Mass of outboard or sterndrive [kg] | |
| $m_{MT}$ | Mass of craft in sea trial condition [kg] = $m_{LC}$ + 150 kg | |
| P | Power of one engine [kW] | |
| $P_{TOT}$ | Total engine power [kW] | |
| β | Deadrise@ transom according to ISO 8666 [degrees] | |

**Loads and moments, coordinate system described in Figure 7.2**

| **Load case** | **$F_X$** | **$F_Z$** | **$M_Y$** |
|---|---|---|---|
| **I** | ei | 1,0 $F_Z$ | 0,7 $M_Y$ |
| **II** | 0,5 $F_X$ | 1,0 $F_Z$ | 1,0 $M_Y$ |
| **III** | 1,0 $F_X$ | ei | 0,5 $M_Y$ |

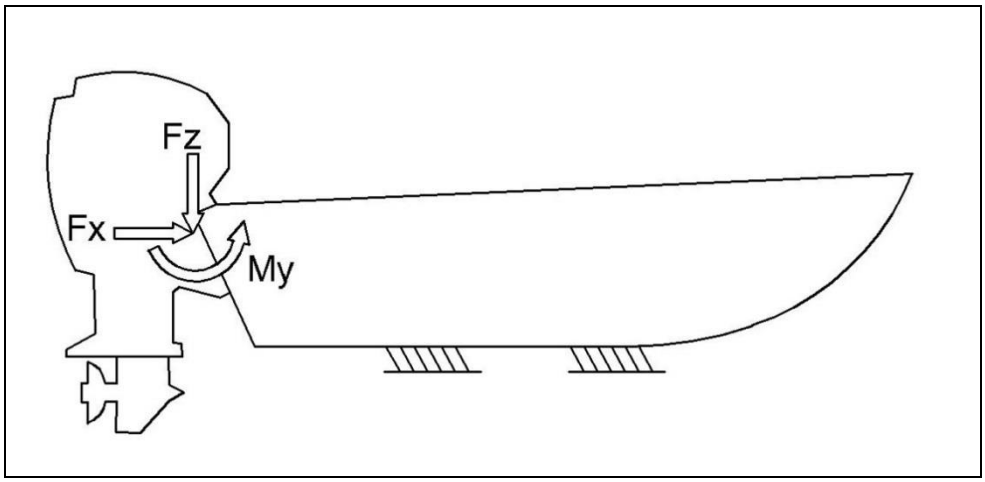


Figure 7.2. The coordinate system for determining the transom forces and moments

## 7.13 Connection of RIB pontoons

The connection of RIB the pontoons to the rigid hull shall be tested asa per ISO 6185-3 for craft with a hull length up to 8 m and ISO 6185-4 for bigger craft.

## 7.14 Design pressure correction factors

### 7.14.1 Design category factor

The design category coefficient factors for the design pressure differences in various design categories shall be used as per the Table 7.1:

Table 7.1. Design category coefficient

| Design category | A | B | C | D |
|---|---|---|---|---|
| $k_{DC}$ | 1,0 | 0,8 | 0,6 | 0,4 |

### 7.14.2 Area reduction factor

The area pressure reduction factor kAR takes account of the effect of the size of the strength member on the design pressure. It shall be determined in accordance with the following formula (7.18)

$$k_{AR} = \frac{0{,}1 \cdot k_R \cdot m_{LDC}^{0{,}15}}{A_D^{0{,}3}} \qquad (7.18)$$

Where

$k_R$ = 1,0

$A_D$ = Design area, m2, to be determined by the formula 7.19 and 7.20:

$A_D = (l \cdot b) \cdot 10^{-6}$; max $2{,}5 \cdot b^2 \cdot 10^{-6}$ [m$^2$] paneeleille (7.19)

$A_D = (l_U \cdot s) \cdot 10^{-6}$; max $0{,}33 \cdot l_U^2 \cdot 10^{-6}$ [m$^2$] jäykisteille (7.20)

Where

a = Shorter side of panel, mm

b = Longer side of panel, mm

$l_U$ = Stiffener unsupported span, mm

$k_{AR}$ must not be taken smaller than 0,25 when calculating requirements based on bending strength or stiffness. When calculating requirements based on allowable shear stress of sandwich cores, $k_{AR}$ must not be taken less than Figure 7.2. For other than bottom and side panels kAR≥0,40. The factor $k_{AR}$ cannot exceed 1,0.

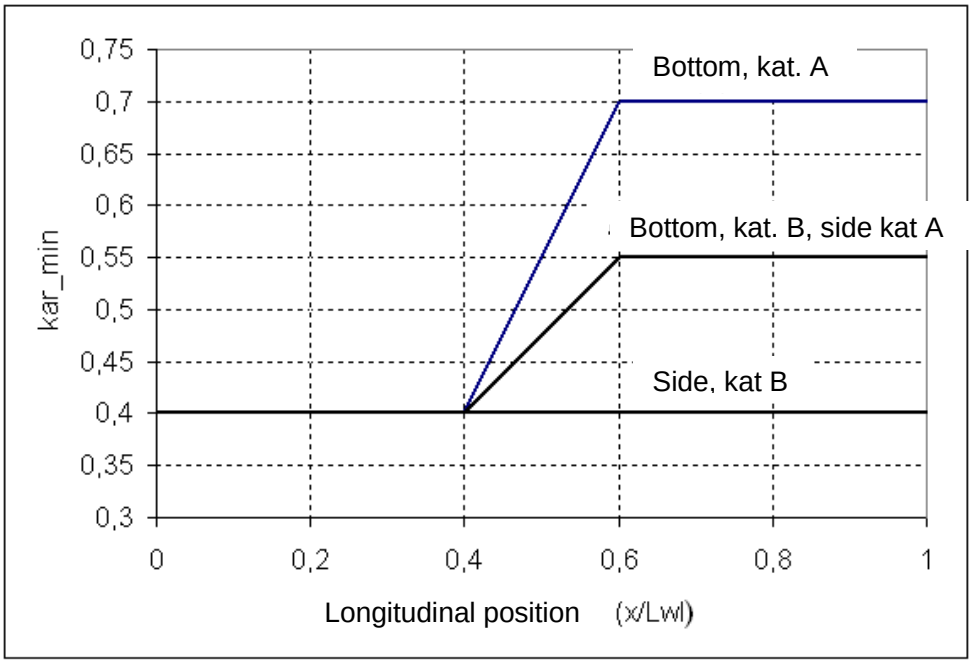


Figure 7.2. Area reduction factor minimum value for sandwich panels.

### 7.14.3 Design pressure correction based on longitudinal position

The longitudinal pressure distribution factor $k_L$ takes account of variations in the distribution of pressure in the craft's longitudinal direction. It is a function of the dynamic load factor $n_{CG}$, and shall be determined using the values in Figure 7.3 or the formulae 7.21 and 7.22.:

$$k_L(x) = \frac{1-0{,}167 \cdot n_{CG}}{0{,}6} \cdot \frac{x}{L_{WL}} + 0{,}167 \cdot n_{CG}; \; 0 \le x \le 0{,}6 \cdot L_{WL} \text{ perästä keulaan päin} \quad (7.21)$$

$$k_L(x) = 1; \; x > 0{,}6 \cdot L_{WL} \text{ perästä keulaan päin} \quad (7.22)$$

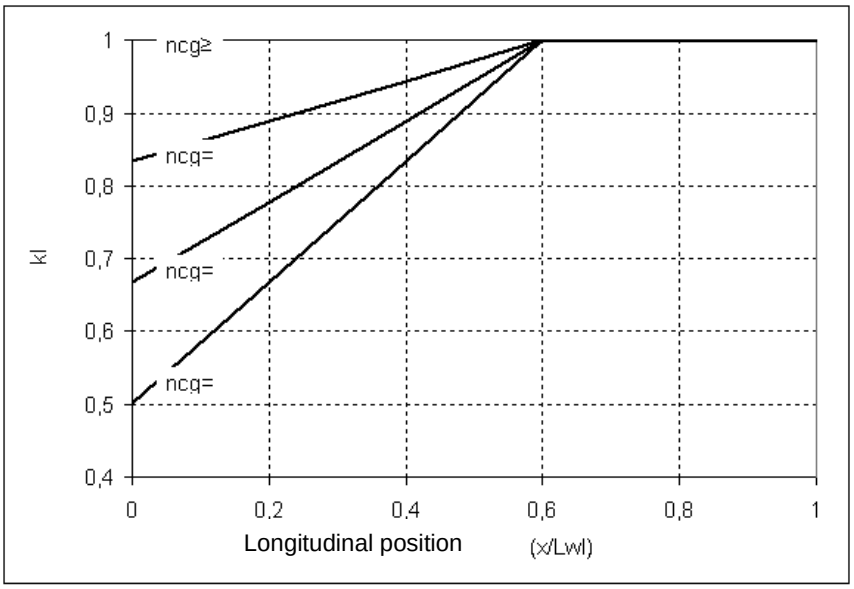


Figure 7.3: Correction factor $k_L$

### 7.14.4 Design pressure correction based on vertical position

The vertical pressure distribution factor $k_Z$ takes account of variations in the distribution of pressure in the vertical direction. It is a function of a strength member's location in relation to the limit between the bottom and the side, as depicted in Figure 7.4. The factor $k_Z$ shall be determined with formula 7.23

$$k_Z = \frac{Z-h}{Z} \qquad (7.23)$$

Where

Z = height of freeboard locally to the weather deck (fully enclosed craft) or to the edge of the gunwale (open craft), m

h = Vertical distance between the center of gravity of the structural part's design area and the limit between bottom and side, m

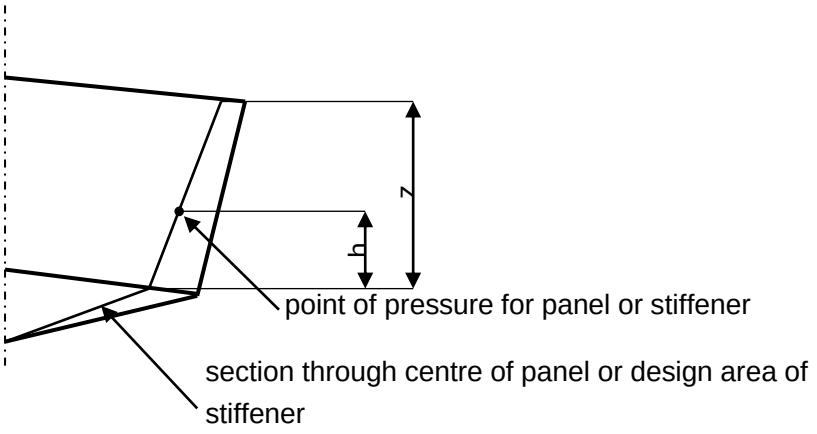


Figure 7.4. Correction of design pressure based on vertical position.

# 8 DESIGN PRINCIPLES, FIBRE-REINFORCED PLASTIC

## 8.1 Objective

This chapter contains requirements regarding the structural arrangement of the craft and also regarding the design of some critical details. Further, the underlying principles for the assessment are dealt with.

The objective is that the structural arrangement and -details has been carried out correctly from a strength of materials point of view and in accordance with the special properties of fiber-reinforced plastic.

## 8.2 References

The requirements in this chapter are based on the international standard *ISO 12215-6:2008 Small craft – Hull construction and scantlings – Part 6: Structural arrangements and details.*

## 8.3 Principles of analysis

### 8.3.1 Simple assessment method

*The simple assessment method means*, that the panels, stiffeners and other structural members covered by the Rules are dimensioned according to the formulae in Chapter 10 using the loads of Chapter 7 and the mechanical properties of Chapter 9.

The simple assessment method may be used provided the following conditions are met:

- The structural arrangement meets the requirements in clause 8.6.;
- The assumptions in clause 8.4 are valid;
- The structure is not critical regarding global loads, see clause 8.5

### 8.3.2 Assessment using First Principles

In cases, where the assumptions listed in 8.3.1 are not valid, the structure, or parts thereof, is to be assessed using first principles of strength of material. For FRP such methods include Laminate Stack Analysis (see ISO 12215-5 Annex H) and Classical Laminate Theory.

### 8.3.3 Finite Element Method (FE)

The standard ISO 12215-5 does not presently allow FE to be used for dimensioning structures subject to sea loads due to their dynamic nature. For other than structures subject to sea loads FE is allowed. The allowable stresses can be found in Chapter 10 clause 10.13.

## 8.4 Assumptions

### 8.4.1 Local and global strength/stiffness

The scantling determination method presented in Chapter 10 is based on dimensioning against local loads. Normally, this will result in scantlings, which are adequate also for global loads. Where this is not the case, the dimensioning against global loads shall be assessed, see Clause 8.5

### 8.4.2 Hierarchy of the load carrying elements

When calculating rule requirements for panels and stiffeners according to Chapter 10, the hierarchy of structure is assumed to adhere to the following principles:

- The panel is supported by secondary stiffeners supported by primary stiffeners as indicated in Figure 8.1;
- The primary stiffeners are at least twice as stiff as the secondary stiffeners, or

$$\frac{E_p \cdot I_p}{l_p^3} \Big/ \frac{E_s \cdot I_s}{l_s^3} \geq 2 \qquad (8.1)$$

- The modulus of elasticity of the laminate in the principal directions is within the limits given in 8.9.2;
- The load is uniformly distributed.;
- The edges of the panel are clamped;
- The ends of the stiffeners are fixed.

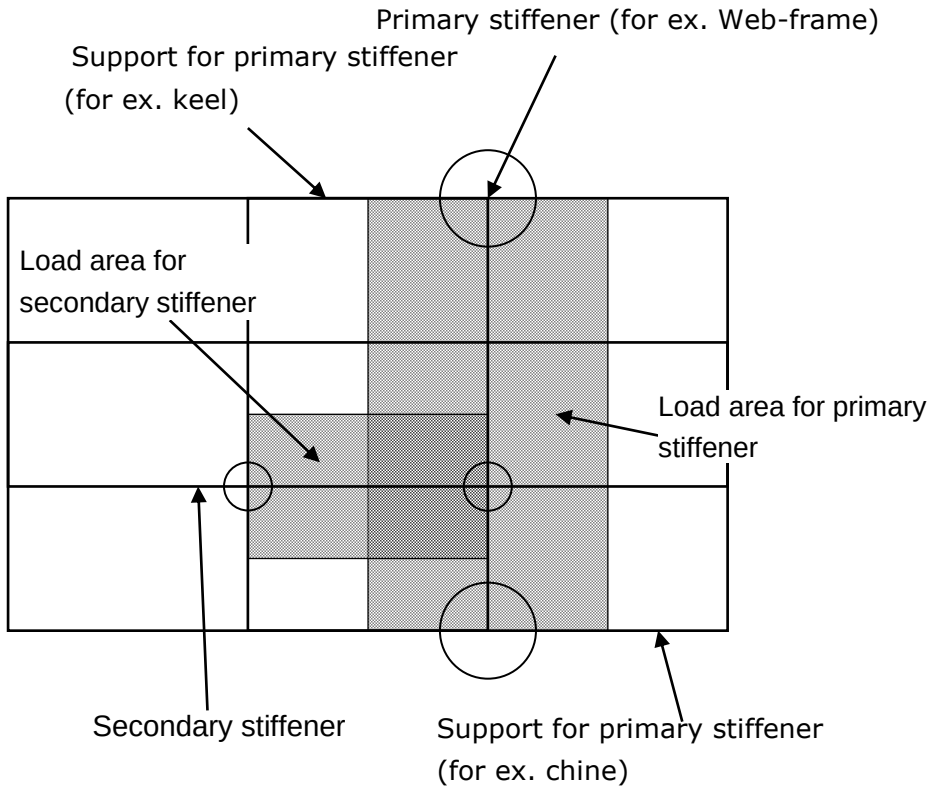


Figure 8.1. Hierachy of load carrying elements

### 8.4.3 Sandwich panels

When calculating scantling requirements using the formulae in Chapter 10, the following assumptions are made:

- The faces of the sandwich panel are thin (total panel thickness/face thickness > 5.77);
- The stiffness (EI) ratio of a thinner face to a thicker face is in the range 0.75...1,0;
- The ratio of the stiffnesses of the face laminates measured in the main directions of the panel is within the limits given in 8.9.2;
- The modulus of elasticity is much higher in the face than in the core material.

Sandwich panels with faces thicker than mentioned above, shall be analysed according to ISO 12215-5 paragraph 10.2.3

## 8.5 Global strength and stiffness

In the following cases also the global strength and stiffness must be investigated:

- If the bottom is only transversely stiffened and the relative speed is $V/\sqrt{L_{WL}} > 6$
- If there are large openings in the deck;

- If the ratio of the hull length to the hull depth $L_H/D_{MAX}$ >12

The global strength and stiffness shall be determined according to ISO 12215-6 Annex D, but the analysis shall be carried out using FE-analysis. At least the deck shall be checked against buckling (compressive stress in the deck). For craft with only transverse stiffening in the bottom also the strength of the bottom shall be checked.

For multihulls, the global strength shall be checked in the load cases given in Chapter 7

## 8.6 Requirements for structural arrangement

### 8.6.1 Displacement craft, design category D

Boats in design category D with $V/\sqrt{L_{WL}} \leq 6$, may be stiffened by the keel, gunwale and transverse stiffeners only. Boats in higher design categories may only be stiffened by transverse framing alone if an assessment of the global strength and stiffness is carried out, see paragraph 8.5.

### 8.6.2 Planing craft

Boats with $V/\sqrt{L_{WL}} > 6$, should in general have longitudinal stiffening in the bottom. The details of longitudinal stiffeners shall meet the requirements of paragraph 8.7.

### 8.6.3 Support for longitudinal stiffeners

The bottom longitudinal stiffeners shall in general be supported by transverse stiffeners such as bulkheads, web frames or deep floors, which are to be designed to carry the load acting on the hull area in question, see Figure 8.1. The details of transverse stiffeners shall meet the requirements in paragraph 8.7.

### 8.6.4 Keels, stem and chines

The craft shall have a reinforced keel, stem and chines according to Chapter 10 paragraph 10.11.

### 8.6.5 Torsion stiffness and -strength

The torsion strength and stiffness is considered adequate if the craft has one of the following items:

- A full deck;
- Transverse bulkheads;
- A strengthened bulwark.

### 8.6.6 Superstructure support points

The loads induced by superstructures shall be led into bulkheads, webframes or other primary structure.

## 8.7 Hull stiffeners

### 8.7.1 Continuity of stiffeners

In craft where V/√LWL>6, the bottom longitudinal stiffeners shall be continuous. Terminating of stiffeners on a panel between stiffeners shall be avoided. With the exceptions of paragraph 8.10.2 the ends of stiffeners shall be fastened to other stiffeners.

### 8.7.2 Straightness and local discontinuities of stiffeners

Hull stiffeners shall be as straight as possible. At most 30 degrees are accepted, provided buckling support is arranged at the points where the direction change. Aprupt changes is the cross section of the stiffeners shall be avoided. If the stiffeners have local discontinuities, the transition shall be smooth and corners shall be rounded, radius at least 30 mm.

### 8.7.3 Safety against buckling

The cross section of stiffeners shall be such that they are not prone to buckling. Stiffeners with one web must not be fastened at an angle exceeding 30 degrees relative to the normal against the panel.

### 8.7.4 Transverse stiffeners

The hull transverse stiffeners such as bulkheads, webframes and deep floors, shall extend from side to side of the hull. If the section modulus of the keel meets the requirements in Chapter 10 clause 10.11.12, the stiffeners span may be taken to the keel, else the distance between the chines shall be used.

### 8.7.5 Floating framing

Floating transverse frames, ie. frames not extending to the bottom or side shell, are permitted only if the safety against buckling is checked

Using interior elements as stiffeners

Interior components alone or together with innerliners may be utilised as structurally effective provided that they meet section 8.7.1...8.7.4 regarding arrangement and Chapter 10 clause 4 regarding scantling requirements.

### 8.7.6 Other stiffeners

The stiffener arrangement of decks, superstructures and structural bulkheads must in general consist of secondary stiffeners supported by primary stiffeners following the principles laid down in 8.4.2.

## 8.8 Laminate design

### 8.8.1 Fibers carry the load

The structure is to be designed such that the fibers primarily carry the loads. The fibers shall be oriented in the anticipated directions of the load.

### 8.8.2 Laminate balance

When the stiffness in the main directions of the laminate are different, a sufficient balance of properties has to be maintained. The stiffness ratio in the longer and shorter directions of the panel shall be within the limits given in Table 8.1.

| Structural member | Stiffness ratio |
|---|---|
| Panels, aspect ratio = 1,0 | 0,80…1,0 |
| Panels, aspect ratio ≥ 2,0 [1)] | 0,68…1,0 |
| Crowns of stiffeners | 0,25…1,0 |

[1]Intermediate values to be obtained by linear

Normally, laminates should contain fibers in the two main directions parallel to the edges, but also in plus/minus 45 degree directions.

### 8.8.3 Laminates containing several types of fibers

When a laminate contains several types of fibers, the compatibility shall be checked by laminate stack analysis or CLT. No layer shall be loaded more than half of the ultimate stress of that layer when subject to the load determined according to Chapter 7.

## 8.9 Layer drop-off

### 8.9.1 Single skin laminates

The drop-off shall in any case be at least 20 times the thickness difference, and for especially stressed areas at least 40 times the difference in thickness. The following are regarded as especially stressed areas:

- Stiffeners ending within a panel;
- Engine foundations;
- Crane foundations;
- Fastening points for lifting lugs;
- Fastening points for mooring cleats.

## 8.10 Sandwich

### 8.10.1 Transition from sandwich to single skin

The width of the transition from sandwich to single skin shall be at least two times the core thickness.

In addition, it has to be checked, that the panel is able to carry the bending moment and shear force in the transition zone.

## 8.11 Laminate bonding

### 8.11.1 Bonding of stiffeners

The bond shall be capable of carrying the bending moment and shear force according to Chapter 10 clause 10.

The thickness of the bonding laminate shall in general be at least the same as the thickness of the web laminate. For a stiffener with a single web, the sum of the laminates shall meet the requirement. The width of the bonding laminate shall be at least 25+15·t mm, where t is the thickness of the bonding laminate. In especially stressed areas (see 8.9.1) the width shall be increased to 25+20·t mm

The ends of stiffeners shall be bonded to other stiffeners except for the cases listed below. The ending of siffeners within a panel is allowed in the following case:

Bottom, all design categories:

- The end of the stiffener runs out against the bottom so it forms an angle of at least 15 degrees, see Figure 8.2.
- The stiffener ends at a reinforced area such as near a keel or chine.
- In both cases the bending- and shear stresses must be exceed half the allowable stresses according to Chapter 10 clause 10.13.
- The distance between the end of the stiffener and surrounding stiff structure shall be in the range 30-75 mm.

Other application, all design categories

- The stiffener end shall be sniped 3:1.
- The bonding laminate shall be according to 8.10.1.

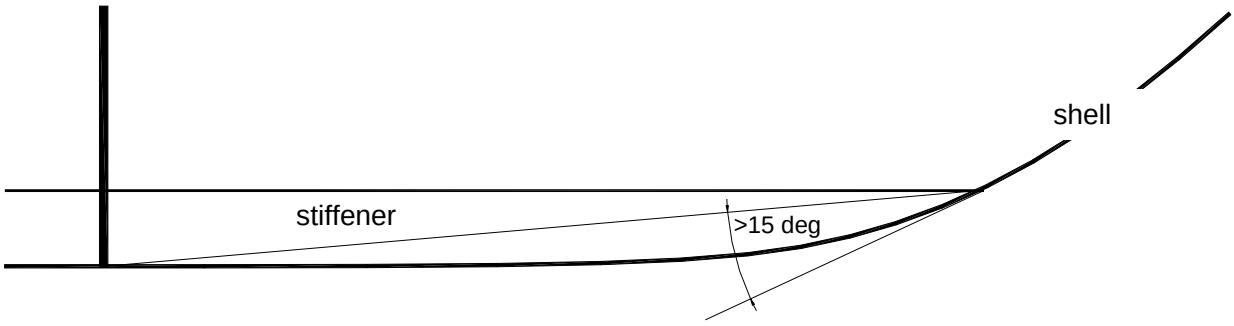


Figure 8.2. The stiffener runs out against the hull shell.

To avoid bonding defects, the stiffener shall be fastened to the panel with bonding paste or similar, which is formed to a fillet between the panel and the stiffener web.

### 8.11.2 Bonding of bulkheads

Plywood bulkheads shall be bonded to the hull from both sides with a laminate of 0,1·bulkhead thickness [kg/m2].

For bulkheads made of single skin, the bonding laminate thickness shall in total be at least as the thickness of the bulkhead.

For sandwich bulkheads, the bonding laminate thicknesses shall be at least equal to the thickness of the faces.

The width of the the bonding laminate shall be at least 25+15 · t [mm] where t is the thickness of the bonding laminate.

Prior to bonding, the joint shall be filleted according to 8.11.1.

### 8.11.3 Adhesive bonding

Adhesive joints shall be designed so the load is transferred between the joined parts primarily by shear. Loads perpendicular to the joint surface and peeling forces shall be avoided. The following requirements apply to the bonding flanges of stiffeners bonded to a laminate panel, typically so called top-hat stiffeners. The width of the bonding flange joint joint shall be at least:

$$b_{wmin} = 1{,}5 \cdot k_j \cdot \frac{t_w}{2} \text{ [mm]; min 50 mm} \qquad (8.1)$$

Where

$t_W$ Thickness of web laminate, for top-hat stiffeners the sum of the two webs

$k_i$ Factor taking into account the shear strength of the adhesive/laminate type, see Table 8.2.

| Fibre reinforcement type | Fibre content by weight $\Psi$[%] | Polyester or vinyl ester adhesive | Epoxy adhesive, curing in room temperature |
|---|---|---|---|
| CSM/WR /multiaxiali | 35 | 12 | 7 |
| | 50 | 14 | 8 |
| Double bias | 35 | 20 | 11 |
| | 50 | 23 | 13 |

For other laminate types, the width of the bonding flange shall be determined according to ISO 12215-6.

## 8.12 Other structural details

### 8.12.1 Openings in load-bearing structures

The effect of openings in load-carrying structures shall be taken into account.

If needed, openings shall be fitted with flanges or similar around their perimeter to avoid buckling .

With the exceptions listed below no openings are allowed in stiffeners unless a detailed calculation shows that the stress level is below the allowable stresses according to Chapter 10 clause 10.13:

Openings in stiffener webs are not allowed in the ends within 20% of the length between support points. No openings are allowed in the crown. In other locations openings in the webs are allowed provided the height does not exceed 50% and the length 75% of the web height.

### 8.12.2 Sharp corners

Unless strengthened with unidirectional laminate, sharp corners shall be avoided.

### 8.12.3 Special issues for sandwich construction

In way of highly loaded fittings, the face laminates shall be reinforced and the sandwich core shall be replaced by a material with a compressive strength of at least 2 MPa or alternatively replaced by single skin laminate.

In way of through-hull fittings the sandwich core shall be replaced with inserts of non-organic material with a compressive strength of at least 2 MPa or alternatively replaced by single skin laminate.

The potential danger of outer skin peeling on sandwich hulls shall be taken into account on fast craft.

### 8.12.4 Other structural details

Spray strips in craft in design categories A, B or C shall be reinforced with additional laminate or filled and laminated over.

Structures, where water can be entrapped, shall be avoided as much as possible. Where such cannot be avoided, they shall be readily accessible (definition see Chapter 34).

Laminate inside surfaces that are exposed to water, such as bilge water, shall be painted with topcoat or other suitable coating.

# 9 FIBRE REINFORCED PLASTICS MATERIAL

## 9.1 Objective

The objective with this chapter is to give requirements for the raw-materials used in structural parts of the craft and to define the mechanical properties to be used in the scantlings determination.

## 9.2 References

This chapter is based on the following international standards:

- ISO 12215.1:2000 - Hull construction and scantlings - Part 1: Materials: Thermosetting resins, glass-fibre reinforcement, reference laminate.
- ISO 12215-2:2002 - Hull construction and scantlings - Part 2: Materials: Core materials for sandwich construction, embedded materials
- ISO 12215-5:2008 - Hull construction and scantlings -- Part 5: Design pressures for monohulls, design stresses, scantlings determination

## 9.3 Documentation

To verify the compliance with the requirements in this chapter, the following documentation is needed:

- Datasheets or similar of the used raw-materials
- Testreports of mechanical properties

## 9.4 Resins

Resins used in structural components shall meet the requirements of ISO 12215-1 as "Type A" resin.

Resin additives such as agents for adjusting tixotrophy or filling, shall be compatible with the resin.

## 9.5 Fiber reinforcement

Fiber reinforcements used in structural components shall meet the requirements of ISO 12215-1.

## 9.6 Compability of fibers with resin

There shall be documentation to show, that materials are suitable for the application in question and for the anticipated environmental conditions. The fiber reinforcement shall have a seizing which is compatible with the laminating resin.

Orthophtalic resin must not be used with powder bounded chopped strand mat.

## 9.7 Mechanical properties of laminates

The following requirements concern glass/polyester laminates if not stated otherwise. Requirements for other materials shall be determined according to ISO 12215-5. Glassfibre reinforced laminates shall fulfill the following minimum properties:

- Ultimate tension stress $\sigma_T$ = 80 MPa
- Tensile modulus $E_T$ = 6350 MPa
- Ultimate bending stress $\sigma_B$ = 135 MPa
- Flexural modulus $E_B$ = 5200 MPa
- Ultimate shear stress in the plane of the laminate $\tau_{XY}$ = 50 MPa
- Ultimate interlaminar shear stress $\tau_{XZ}$ ja $\tau_{YZ}$ = 15 MPa

Mechanical properties shall be determined by testing according to paragraph 8 or by calculation using the method in paragraph 9.

## 9.8 9.8. Determination of mechanical properties by testing

When the mechanical properties of laminates are determined by testing, the specimen shall be produced using the same production processes and -parameters as when manufacturing the craft itself.

The relevant values shall be determined in the both main directions of the laminate. Unidirectional laminates shall be tested in one direction only. The laminates shall be tested without gel- or topcoat.

The following standards shall be used for determination of mechanical properties:

- Tensile stress and –modulus, ISO 527-1 ja ISO 527-4.
- Compressive stress, ASTM D3410
- Bending stress and modulus, ISO 178.
- Shear stress, ASTM D 4255.

When measuring bending strength, the outer surface (=the outside of the hull) shall be in tension.

The average results for each tested property shall meet the requirements in 9.7. No single value shall be less than 80% of the average value.

## 9.9 Determination of mechanical properties by a nominal fiber content

The mechanical properties of laminates may also be determined on the basis of a nominal fiber content which is a function of the used reinforcement products and the manufacturing process.

### 9.9.1 Nominal fiber content

The nominal fiber content, Ψ, which is expressed in percent by weight, shall be taken as follows. The formulae are valid for laminates reinforced by glassfibre. For other fiber types the nominal fiber content shall be determined according to ISO 12215-5.

- Chopped strand mat (CSM) laminates Ψ = 30%
- CSM / woven rowing laminates Ψ = 46-18·R, where R = proportion of CSM
- Multidirectional laminate Ψ = 50%
- Unidirectional laminates Ψ = 55%

### 9.9.2 Mechanical properties

The mechanical properties of laminates is determined from Figure 9.1...9.6 based on the nominal fiber content. The figures apply to laminates reinforced by chopped strand mat and/or balanced woven rowing and for unidirectional laminates. The mechanical properties for "Double Bias" (±45o fabrics) and multiaxial fabrics shall be determined according to ISO 12215-5.

Requirements from paragraph 12 shall be met when acquiring values from figures 9.1...9.6.

When assessing the compliance according to Chapter 10, the laminate thickness requirements shall be converted to reinforcement area mass using Figure 9.8 which is based on ISO 12215-5 Annex C.

## 9.10 Sandwich core materials

Sandwich core materials in structural components of the craft shall meet the requirements of ISO 12215-2 "Grade 1."

### 9.10.1 Mechanical properties of sandwich core materials

Unless samples have been tested from the actual batch used for the craft in question, the mechanical properties of sandwich core materials shall be determined on the basis of the material, the elongation to break and the density of the material using Figures 9.8...9.11.

## 9.11 Values to be used for scantling determination

The values used for scantling determination depend on the level of production control.

If the mechanical properties have been determined by testing, and the tested laminates correspond to the laminate for the structural part in question, the values to be used for scantling determination are:

For tensile-, compressive-, bending- and shear strength, the smallest of the following

- 90% of the average, μ, value obtained in the tests;
- The average value μ minus two standard deviations;

For the modulus, the average value obtained from the test shall be used.

If no testing has been carried out, but the fiber content is regularly monitored in the production, the values determined according to paragraph 8 are to be used without further correction for scantling determination.

If no testing has been carried out and no monitoring of fiber content during production is done, the values determined according to paragraph 8 are to be multiplied by 0,8 for scantling determination.

For sandwich core materials, the values obtained from paragraph 10.1 shall be used without further correction.

### 9.12 Adhesives

Adhesives to be used in structural components are to be intended for the combination of materials in question.

For bonding sandwich faces to the core, adhesives developed for that purpose shall be used. Alternatively, shop-made adhesives of the same resin type that is used for lamination may be used.

### 9.13 Other materials

Plywood shall be water resistant type and its adhesives shall meet the requirements from WBP standard B.S. 6566 part 8.

Embedded materials such as reinforcements for fittings etc. shall meet the requirements in ISO 12215-3.

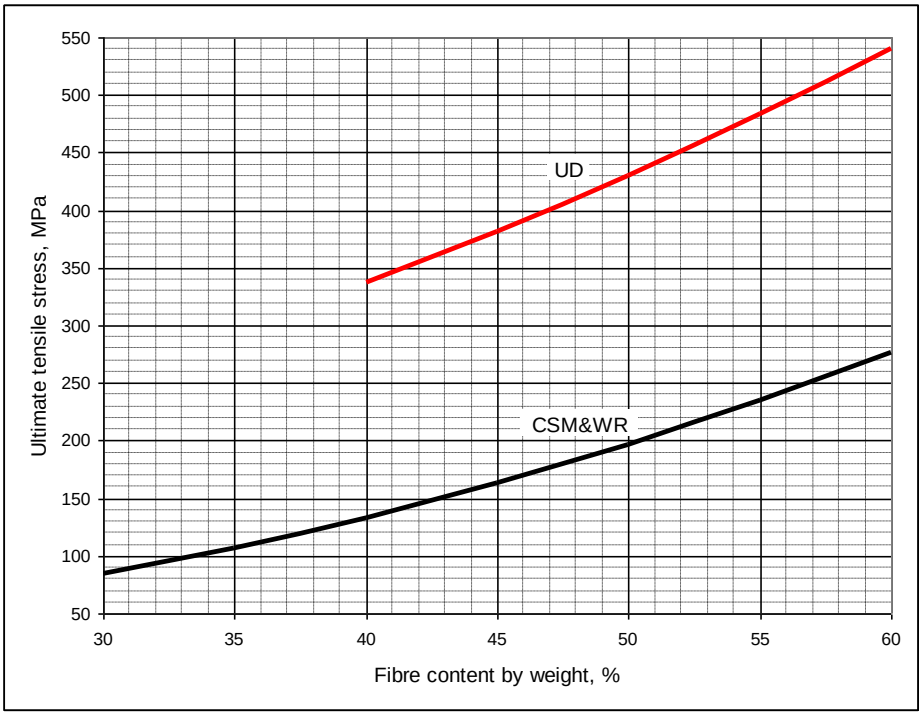


Figure 9.1. Ultimate tensile stress for chopped strand mat/woven rowing laminates and unidirectional laminates as a function of nominal fiber content.

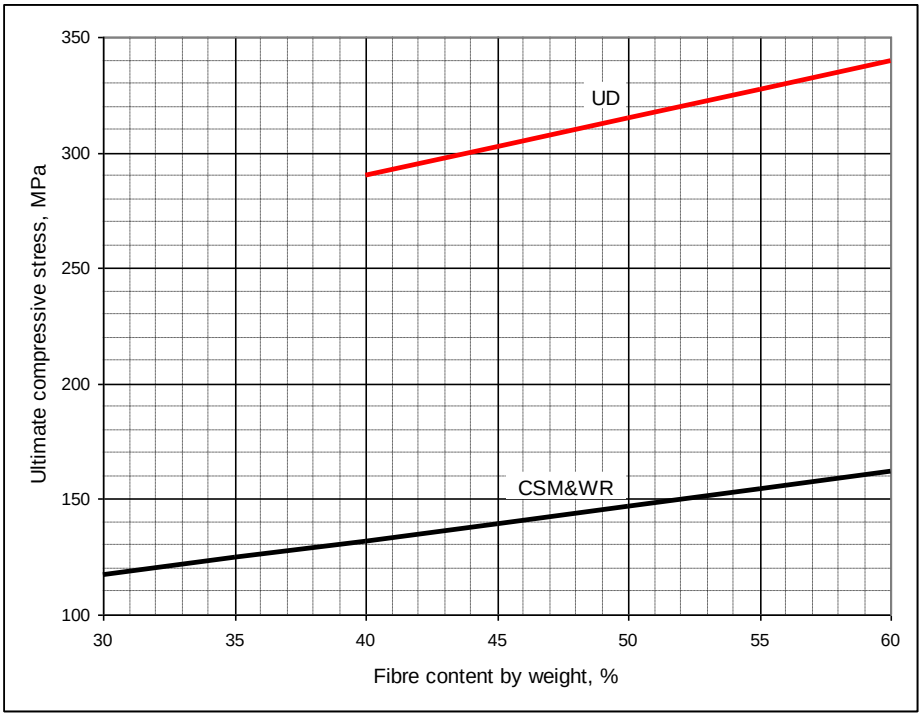


Figure 9.2. Ultimate compressive stress for chopped strand mat/woven rowing laminates and unidirectional laminates as a function of nominal fiber content.

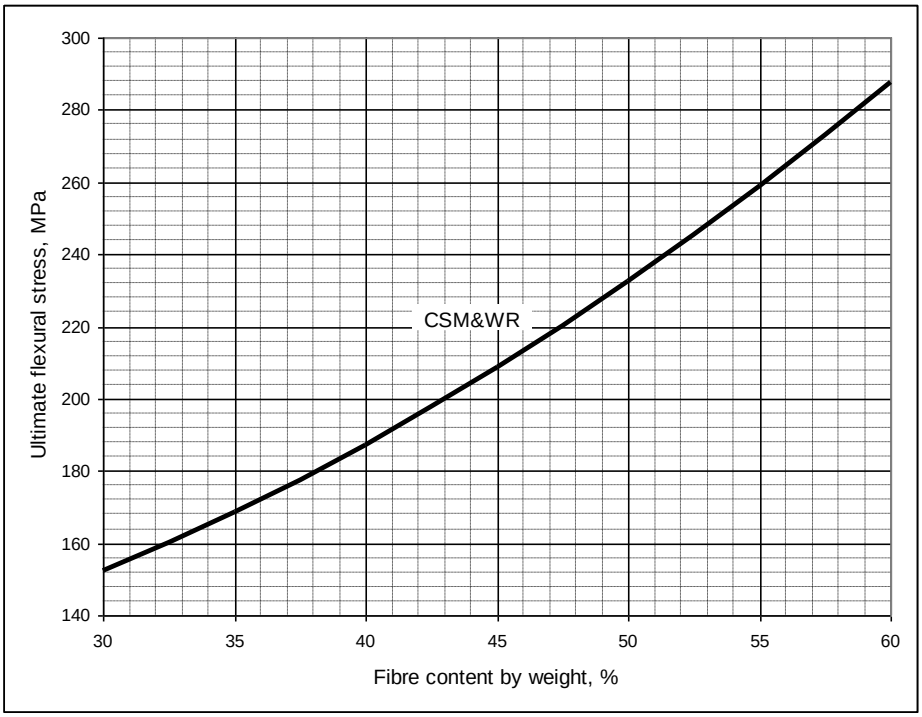


Figure 9.3. Ultimate flexural stress for chopped strand mat/woven rowing laminates and unidirectional laminates as a function of nominal fiber content.

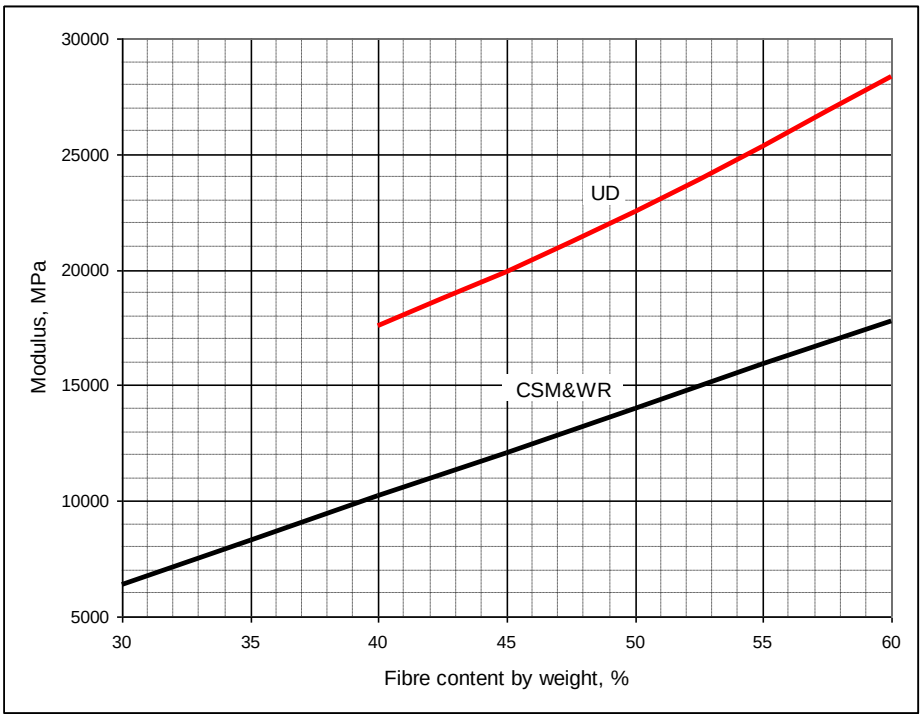


Figure 9.4. Modulus of elasticity for chopped strand mat/woven rowing laminates and unidirectional laminates as a function of nominal fiber content.

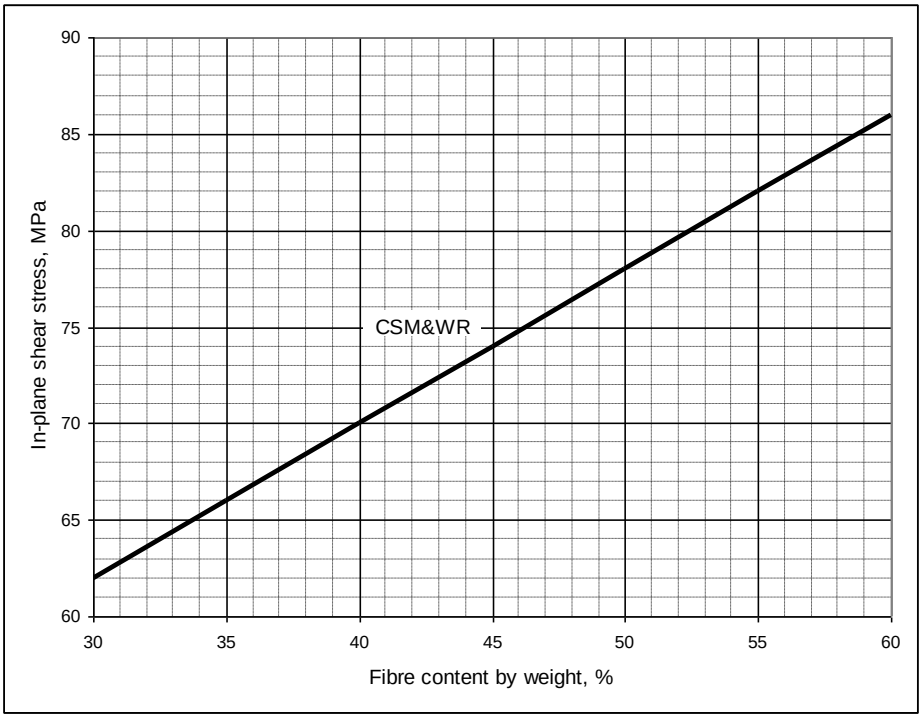


Figure 9.5. Ultimate shear stress in the plane of the laminate for chopped strand mat/woven rowing laminates as a function of nominal fiber content.

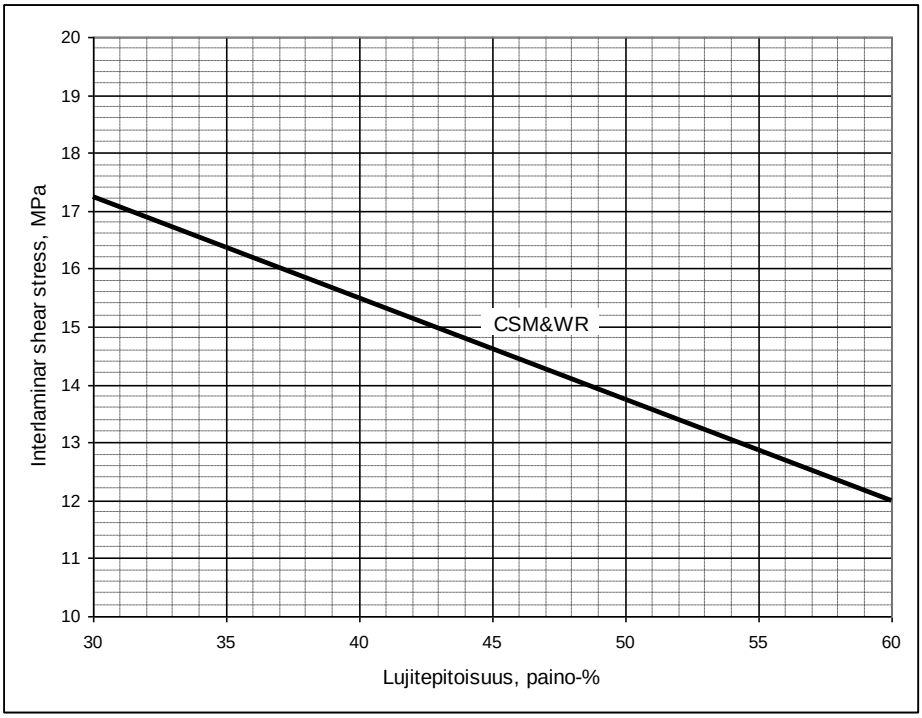


Figure 9.6. Ultimate interlaminar shear stress for chopped strand mat/woven rowing as a function of nominal fiber content.

Return to the cover page

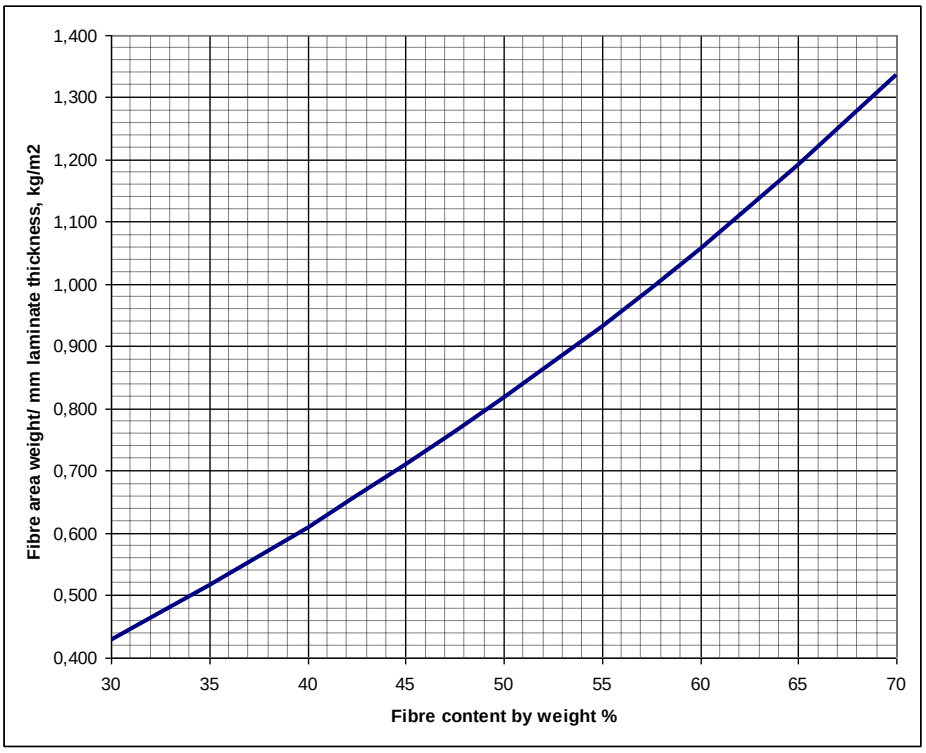


Figure 9.7. Reinforcement area mass as a function of fiber content.

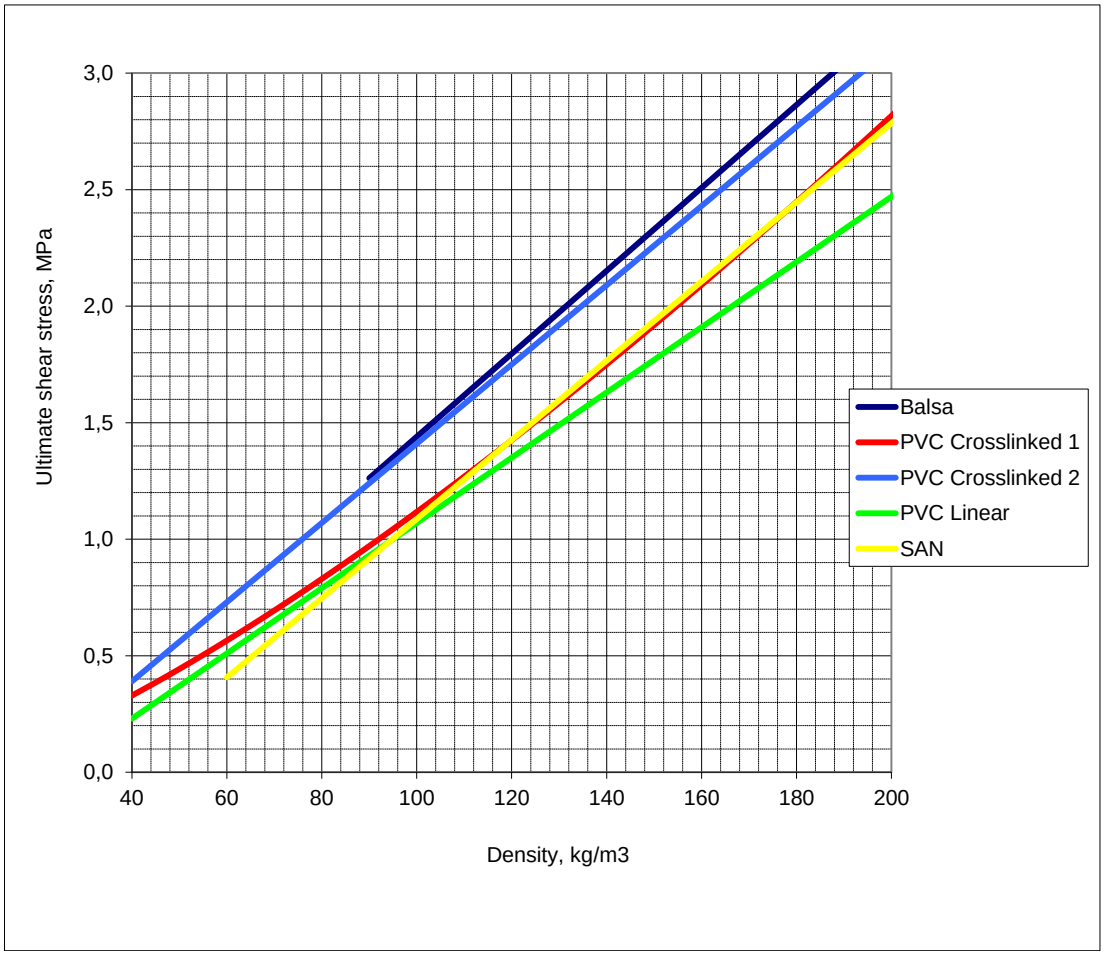


Figure 9.8. Ultimate shear stress for structural polymer foams as a function of density.

Return to the cover page

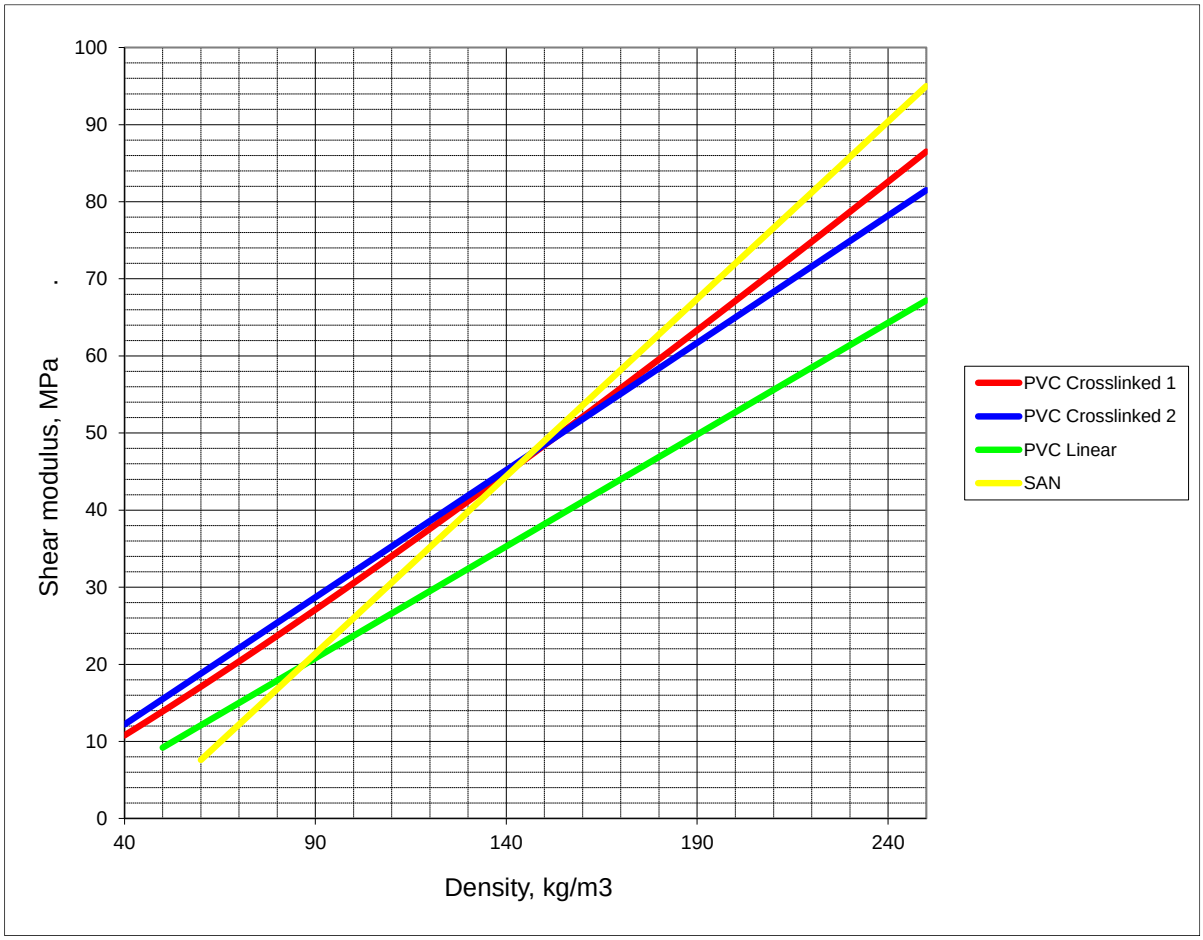


Figure 9.9. Shear modulus for structural foam materials as a function of density.

Return to the cover page

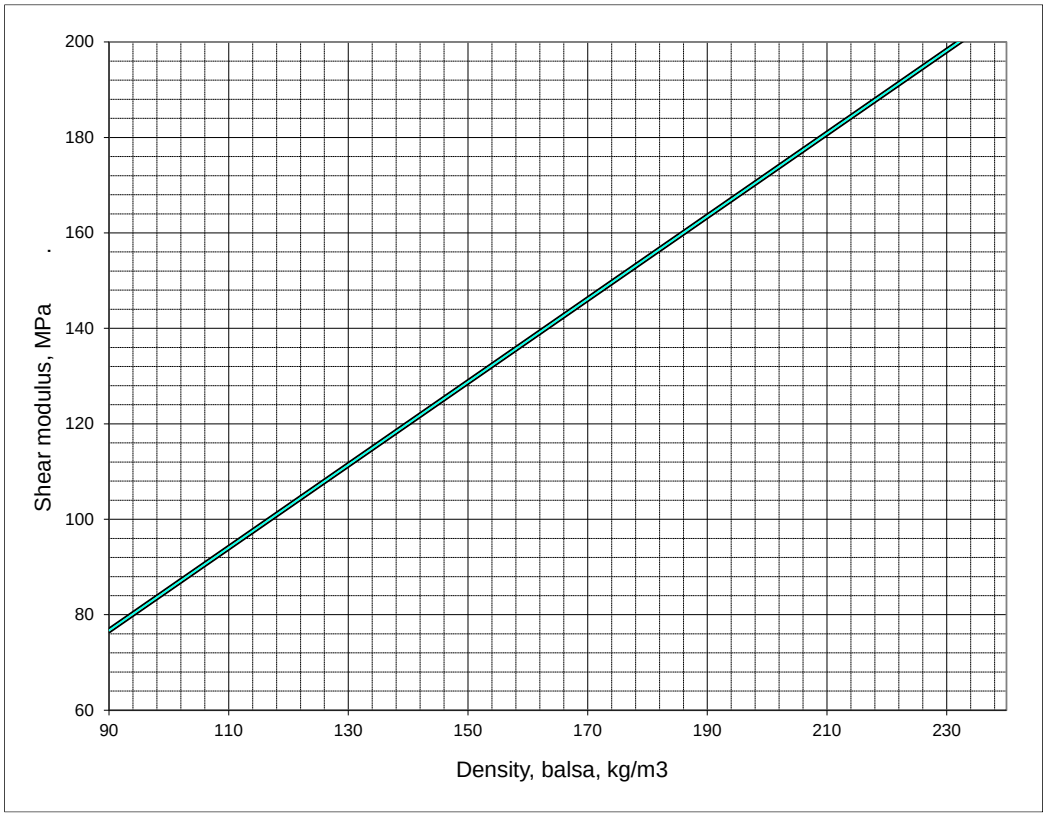


Figure 9.10. Shear modulus of end grain balsa as a function of density

Return to the cover page

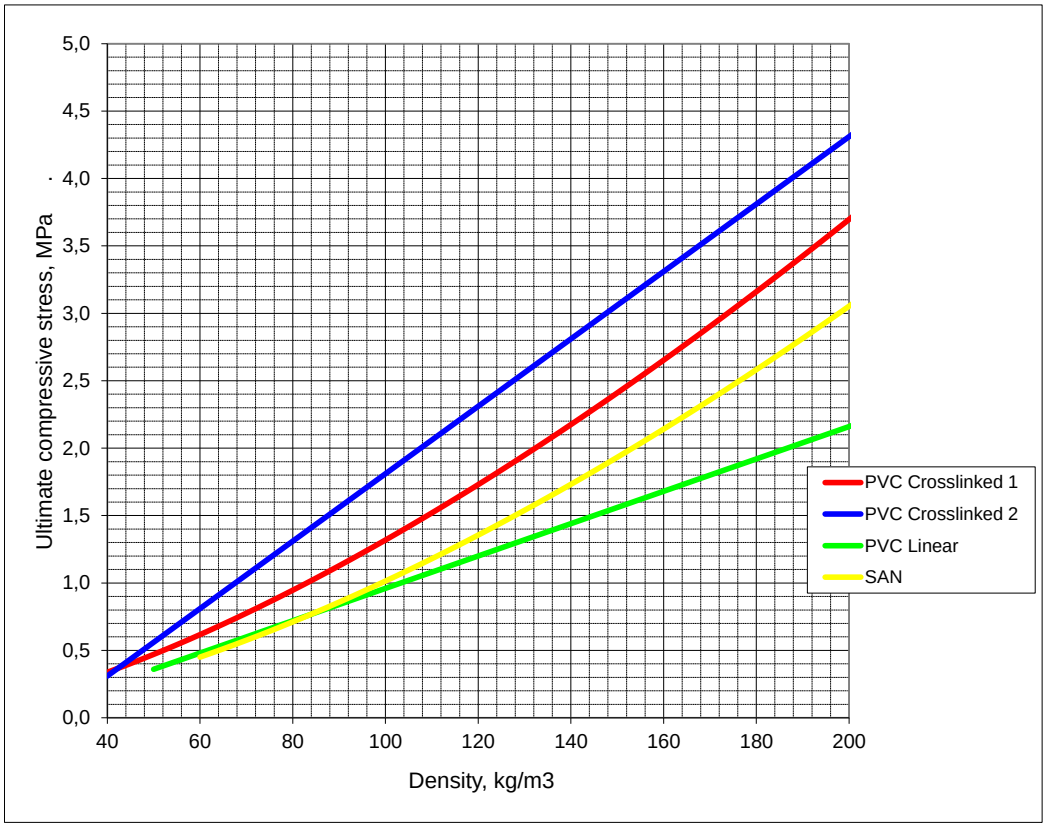


Figure 9.11. Ultimate compressive stress for structural polymer foams as a function of density.

Return to the cover page

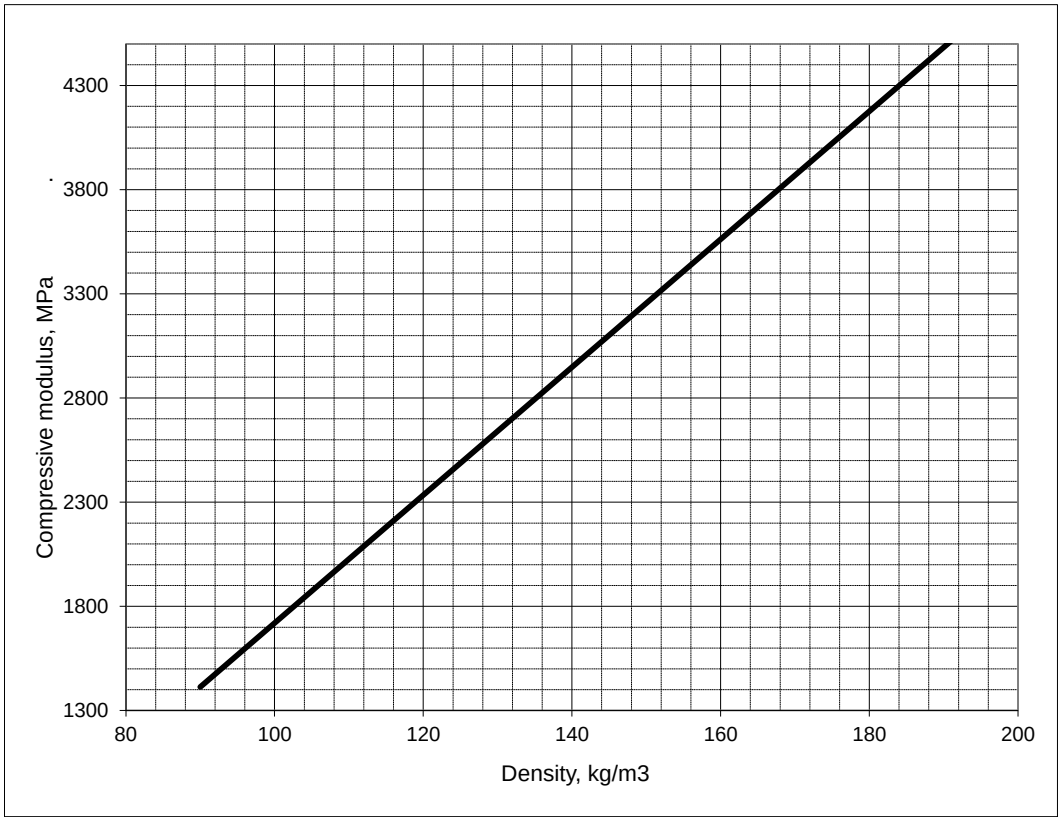


Figure 9.12 Compressive modulus of end grain balsa as a function of density

# 10 SCANTLINGS DETERMINATION, FIBRE REINFORCED PLASTICS

## 10.1 Objective

In this chapter is given equations and allowable stresses for the determination of scantlings for strength members made of fiber-reinforced plastics.

Formulae in this chapter are intende to be used only used with loads defined in Chapter 7, material values from Chapter 9 following the assumptions and principles presented in Chapter 8.

## 10.2 References

The scantlings equations given in this chapter are those of the international standard ISO 12215-5:2008 Small craft – Hull construction and scantlings – Part 5: Design pressures for monohulls, design stresses, scantlings determination.

Compared with the standard, however, higher minimum reinforcement requirements based on craft length, displacement and speed for minimum strength against local loads are given. In addition, the allowable stresses are in some cases smaller in to reflect the more demanding use of commercial craft.

In addition, the following standards are referred to for RIB's:

- EN ISO 6185-3:2014 Inflatable boats - Part 3: Boats with a hull length less than 8 m with a motor rating of 15 kW and greater
- EN ISO 6185-4:2011 + Corr. 2014 Inflatable boats. Boats with a hull length of between 8 m and 24 m with a motor power rating of 15 kW and greater

## 10.3 Documentation

To verify requirements in this chapter, following documentation is required:

- Structural drawings, including the following where relevant:
    - Longitudinal section;
    - Transverse sections;
    - Laminate schedule;
    - The materials used and their mechanical properties (see Chapter 9);
- Scantling calculations indicating the rule requirements for different structural elements and the attained values.;

## 10.4 List of symbols

Symbols used in several Chapters are given in Chapter 1. In Table 10.1 some symbols used in this Chapter are listed. In addition, there are symbols defined in their context.

Table 10.1: Symbols used in this Chapter

| Symbo | Unit | Description | Reference |
|---|---|---|---|
| $p$ | kPa | Design pressure | Chapter 7 |
| $l$ | mm | Shorter side of panel | |
| $b$ | mm | Longer side of panel | |
| $s$ | mm | Stiffener space, load width | |
| $l_U$ | mm | Unsupported span of stiffener | |
| $t$ | mm | Laminate thickness | |
| $W$ | $cm^3$ | Section modulus | |
| $I$ | $cm^4$ | Second moment of area | |
| $E$ | MPa | Elasticy modulus | |
| $k_C$ | - | Correction for curvature | Clause 8.1 |
| $\sigma_d$ | MPa | Allowable tensile/compressive stress | Clause 12 |
| $\tau_d$ | MPa | Allowable shear stress | Clause 12 |

## 10.5 Dimension of panels

The dimensions of panels are given for some typical cases in Figure 10.1.

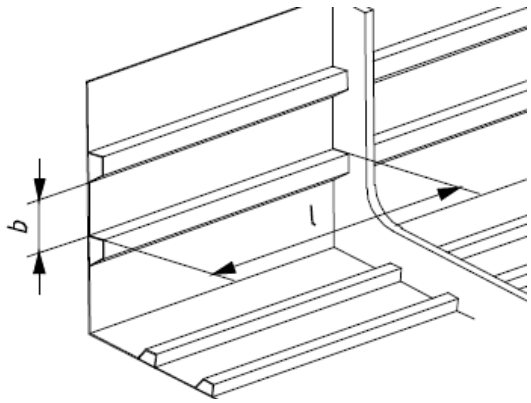


a) Rectangle shaped panel. Note, that l and b are measured to the web of the stiffener.

b)

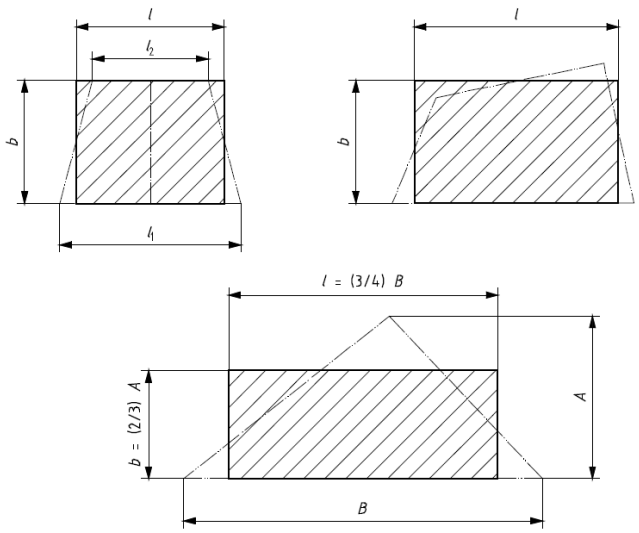


Some other shapes

Figure 10.1 Measures for typical panels

## 10.6 Scantlings requirements, single skin panels

For single-skin panels, the laminate thickness, excluding gel and topcoats, shall not be less than obtained from formula (10.1):

$$t = b \cdot k_C \cdot \sqrt{\frac{P \cdot k_2}{1000 \cdot \sigma_d}} \text{ [mm];} \qquad (10.1)$$

Where

$k_C$ = curvature correction factor, see 10.9.1

P = design pressure, see Chapter 7.

$k_2$ = panel aspect correction factor, see. 10.9.2

$\sigma_D$ = allowable stress. see 10.13.

The laminate thickness shall never be less than $t_{min}$ according to Table 10.2.

The thickness requirements obtained from formulae 10.1 Table 10.2 shall be converted to required area mass of reinforcement as described in Chapter 9 paragraph 9.3.

Note! If the clamping of an edge of a panel is less than that of a panel continuing past its edge stiffeners, the thickness requirement must be adjusted to conform to the actual edge clamping.

## 10.7 Scantlings requirement, sandwich panels

### 10.7.1 Bending strength criterion

The section modulus of a 1 cm strip of the sandwich panel, $W_O$, calculated to the outer (loaded) surface and $W_I$ calculated to the inner side shall be not less than given in formulae 10.2 and 10.3:

$$W_0 \geq \frac{b^2 \cdot k_C^2 \cdot p \cdot k_2}{6 \cdot 10^5 \cdot \sigma_{dto}} \text{ [cm}^3\text{]} \qquad (10.2)$$

$$W_i \geq \frac{b^2 \cdot k_C^2 \cdot p \cdot k_2}{6 \cdot 10^5 \cdot \sigma_{dci}} \text{ [cm}^3\text{]} \qquad (10.3)$$

Where

$k_2$ correction factor for flexural stress based on panel aspect ratio.

$\sigma_{dto}$ allowable tensile stress in outer face [MPa] see Clause 10.13.

$$\sigma_{dci} = 0{,}3 \cdot \sqrt[3]{E_C \cdot E_{C0} \cdot G_C} \quad \text{or } 0{,}5 \cdot \sigma_{CU} \text{ whichever is less, [MPa]} \qquad (10.4)$$

And

$E_C$ Elasticity modulus of inner face, [MPa]

$E_{CO}$ Elasticity modulus in compression for sandwich core, [MPa]

$G_C$ Shear modulus of the sandwich core, [MPa]

$\sigma_{CU}$ Ultimate compressive stress of laminate, [MPa]

Note! If the clamping of an edge of a panel is less than that of a panel continuing past its edge stiffeners, the thickness requirement must be adjusted to conform to the actual edge clamping.

### 10.7.2 Stiffness criterion

The second moment of area of a 1 cm strip of the sandwich panel shall be not less than given in formulae 10.5:

$$I_{1cm} \geq \frac{b^3 \cdot k_C^3 \cdot p \cdot k_3}{12 \cdot 10^6 \cdot k_1 \cdot E_{i0}} \text{ [cm}^4\text{]} \qquad (10.5.)$$

Where

$k_1$ stiffness factor = 0,017

$k_3$ stiffness correction based on panel aspect ratio, see Clause 10.9.2.

Note! In addition, the requirement in Chapter 8 Clause 8.10.2 shall be met.

When determining the moment of inertia, the thicknesses shall be calculated with the nominal fibre content as described in Chapter 9 paragraph 9.9.1.

### 10.7.3 Shear criterion

The thickness of a sandwich panel measured as the distance between the mid-points of the skins must be at least as given by formula 10.6:

$$t_s \geq \sqrt{k_C} \cdot \frac{k_{SHC} \cdot P \cdot b}{1000 \cdot \tau_d} \text{ [mm]} \qquad (10.6)$$

Where

$$t_s = t_C + 0{,}5 \cdot (t_i + t_0) \text{ [mm]} \qquad (10.7)$$

And

$k_{SHC}$ shear stress factor based on panel aspect ratio, see Clause 10.9.2.

$t_C$ core thickness, mm

$t_i$ thickness of inner sandwich skin, mm

$t_o$ thickness of outer sandwich skin, mm

### 10.7.4 Sandwich core minimum compressive strength in hull bottom

The compressive strength of sandwich core material used in hull bottom shall be at least as given by formula 10.8.

$$\sigma_C = 0{,}01 \cdot P_{BMPBASE}, \text{ MPa, kuitenkin vähintään 1,0 MPa} \qquad (10.8)$$

Where

$P_{PMPBASE}$ bottom slamming pressure, see Chapter 7 formula 7.5.

## 10.8 Minimum amount of fiber reinforcement for local strength

In addition to the requirements on bending strength, -stiffness and shear load capacity, the mass of the total laminate reinforcement per square meter, $w_{min}$, must be at least as indicated by the formula below.

$$w_{MIN} \geq 0{,}5 \cdot k_5 \cdot \left(A + k_7 \cdot V + k_8 \cdot m_{LDC}^{0{,}33}\right) \text{ [kg/m}^2\text{]} \qquad (10.9)$$

The speed used in the formula must be at least $5 \cdot \sqrt{L_{WL}}$. The constant A and the factors $k_5$, $k_7$ and $k_8$ are found in Table 10.2.

Table 10.2: Constants and factors to be used in formula 10.9

| Area | *A* | $k_5$ | $k_7$ | $k_8$ | Sandwich outer skin |
|---|---|---|---|---|---|
| Hull bottom | 1,5 | 1) | 0,03 | 0,15 | $k^5$ 0,6 $w_{MIN}$ |
| Hull topside and transom | 1,5 | 1) | 0 | 0,15 | $k^5$ 0,6 $w_{MIN}$ |
| Decks for persons, superstructures | $1,5 + 0,2 \cdot L_H$ | 1) | 0 | 0 | $k^5$ 0,6 $w_{MIN}$ |
| Cargo decks, load $Q$ [t/m$^2$] | $3 + 0,5 \cdot Q + 0,15 \cdot L_H$ | 1) | 0 | 0 | $k^5$ 0,6 $w_{MIN}$ |

1) Correction factor $k_5$:

- 1,00 for E glass laminate with more than 50% chopped strand mat and the rest woven rowing and/or biaxial.
- 0,90 for E glass laminate with not more than 50% chopped strand mat and the rest woven rowing and/or biaxial.
- 0,70 for Aramid and/or HS carbon fiber laminates consisting of woven and/or bi or multiaxial reinforcements

## 10.9 Correction factors for panels

### 10.9.1 Correction for panel curvature

The correction factor kc takes into account the effect the panel curvature has on the flexural strength and flexural rigidity, and on the shear stress of the sandwich panels. It is calculated according to Table 10.3.

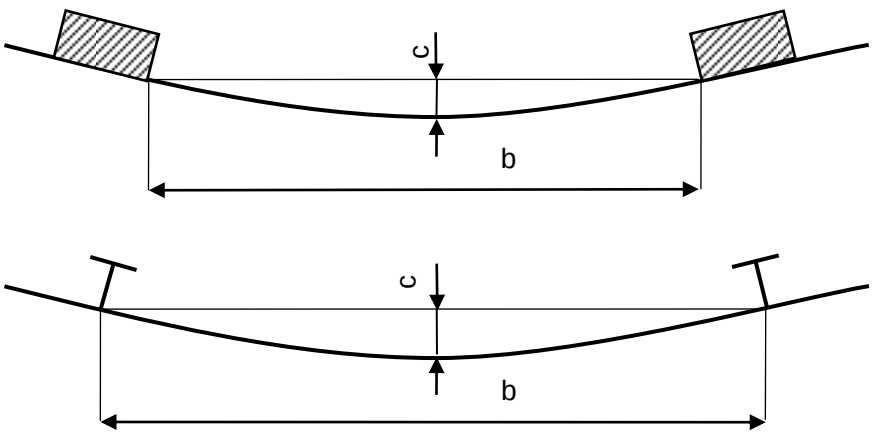


Figure 10.2. Measurements needed for correction for curvature.

Table 10.3. Panel curvature factor kc.

| *c/b* | $k_c$ |
|---|---|
| 0…0,03 | 1,0 |
| 0,03…0,18 | 1,1 - 3,33 · *c/b* |
| >0,18 | 0,5 |

## 10.10 Correction based on panel aspect ratio

Correction factors based on panel aspect ratio to be used in formulae 10.1-10.6, are found Table 10.4.

Table 10.4. Correction factors on the basis of panel aspect ratio

| Aspect ratio | Correction factor for bending stress | Correction factor for bending stiffness | Correction factor for shear stress [1)] |
|---|---|---|---|
| *l/b* | $k_2$ | $k_3$ | $k_{SHC}$ |
| >2,0 | 0,500 | 0,028 | 0,465 |
| 2,0 | 0,497 | 0,028 | 0,463 |
| 1,9 | 0,493 | 0,027 | 0,459 |
| 1,8 | 0,487 | 0,027 | 0,453 |
| 1,7 | 0,479 | 0,026 | 0,445 |
| 1,6 | 0,468 | 0,025 | 0,435 |
| 1,5 | 0,454 | 0,024 | 0,424 |
| 1,4 | 0,436 | 0,023 | 0,410 |
| 1,3 | 0,412 | 0,021 | 0,395 |
| 1,2 | 0,383 | 0,019 | 0,378 |
| 1,1 | 0,349 | 0,016 | 0,360 |
| 1,0 | 0,308 | 0,014 | 0,339 |

## 10.11 Stiffeners

### 10.11.1 General

The following requirements apply to stiffeners made from similar laminates. If the rigidity of the crown, web or base laminate of a stiffener does not differ by more than 25% from each other, the flexural strength and rigidity of the stiffener may be estimated using the section modulus or moment of inertia. In other cases, the method for orthotropic stiffeners in ISO 12215-5 shall be used.

### 10.11.2 Section modulus

The section modulus calculated to the outer face (loaded side), $W_o$, and inner side, $W_i$, shall be at least as given by equations 10.10 and 10.11.

$$W_0 \geq \frac{83{,}3 \cdot k_{CS} \cdot p \cdot s \cdot l_U^2}{\sigma_{do}} \cdot 10^{-9} \text{ [cm}^3\text{]} \qquad (10.10)$$

$$W_i \geq \frac{83{,}3 \cdot k_{CS} \cdot p \cdot s \cdot l_U^2}{\sigma_{di}} \cdot 10^{-9} \text{ [cm}^3\text{]} \qquad (10.11)$$

Where

$l_U$ stiffener span, not needed to be taken greater than $330 \cdot L_H$ [mm]

$k_{CS}$ correction factor for stiffener curvature, see Table 10.5.

$\sigma_{di}$ design stress for inner skin laminate, [MPa], see clause 10.13

$\sigma_{do}$ design stress for outer skin laminate, [MPa], see clause 10.13

Table 10.5: Correction factor for stiffener curvature, $k_{CS}$

| $c_U/l_U$ | $k_{CS}$ |
|---|---|
| 0…0,03 | 1,0 |
| 0,03…0,18 | $1{,}1 - 3{,}33 \cdot c_U/l_U$ |
| 0,18… | 0,5 |

When calculating the section modulus of the actual stiffener, the laminate thicknesses shall be determined for the appropriate fiber content for the laminate in question according to Chapter 9 clause 9.9.1.

If the end fixity of one or both ends of the stiffener differs from the situation, where a stiffener is continuous over its support points, the required section modulus shall be corrected to correspond to the real end fixity.

### 10.11.3 Second moment of area

The second moment of area, I, including effective flange according to Clause 9.4, shall be at least as given by formula 10.12.

$$I \geq \frac{26 \cdot k_{CS}^{1,5} \cdot p \cdot s \cdot l_U^3}{k_{1S} \cdot E_{TC}} \text{ [cm}^4\text{]} \qquad (10.12)$$

Where

$l_U$ stiffener span, not needed to be taken greater than $330 \cdot L_H$ [mm]

$k_{CS}$ correction factor for stiffener curvature, see Table 10.5.

$E_{TC}$ average value of tensile and compressive moduli, [MPa]

$k_{1S}$ stiffness factor=0,05

### 10.11.4 Effective flange

When calculating the section modulus SM and moment of inertia I, the effective flange associated with the stiffener shall be taken into account. When calculating the geometric properties, a width equal to the stiffener width plus 20 times the thickness of the laminate may be considered the effective flange of the stiffener, see Figure 10.3. When determining the moment of inertia, the laminate thicknesses shall be determined for the appropriate fiber content for the laminate in question according to Chapter 9 clause 9.9.1.

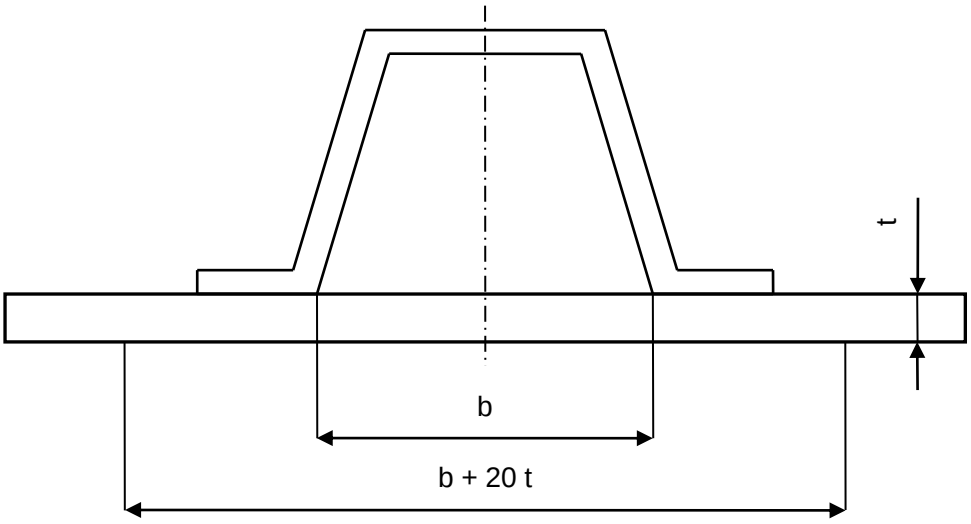


Kuva 10.3: Effective flange of stiffener

### 10.11.5 Cross-section of stiffener web

The cross-section of the web of the stiffener must be at least as given by formula 10.13

$$A_W = \frac{k_{SA} \cdot p \cdot s \cdot l_U}{\tau_d} \text{ [cm}^2\text{]} \qquad (10.13)$$

$k_{SA}$ = factor for cross-sectional area.

- $k_{SA}$ = 5 if the stiffener is attached to plating
- $k_{SA}$ = 7.5 for floating stiffeners

$t_d$ = allowable shear stress for webs, MPa

When determining the shear area, the laminate thicknesses shall be determined for the appropriate fiber content for the laminate in question according to Chapter 9 clause 9.9.1

### 10.11.6 Orthotropic stiffeners

Stiffeners built with laminates with moduli that differ by more than 25% from each other are to be assessed using the procedure presented in the standard ISO 12215-5.

### 10.11.7 Buckling of stiffeners

Where the normal stress in the crown or flanges or the shear stress in the web exceeds 80% of allowable stress, the potential risk of stiffener buckling must be estimated using the procedure presented in the standard ISO 12215-5.

## 10.12 Reinforced shell areas

Where applicable, the strengthened areas of the hull must conform to Figure 10.3

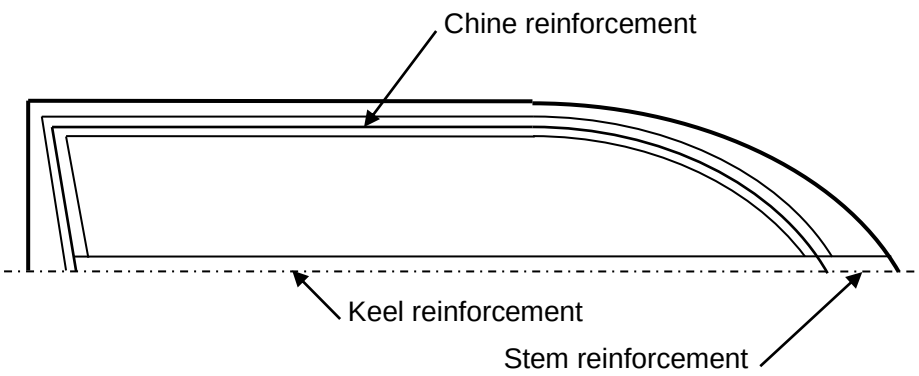


Figure 10.4. Reinforced laminate areas

### 10.12.1 Reinforced keel

Keel structures shall be strengthened to sustain loads from docking and/or transporting the craft on a trailer. This requirement is considered to be fulfilled, when the requirements for the keel laminates and section modulus presented in Table 10.6 are met. The section modulus of the keel is also to be assessed as a bottom stiffener.

### 10.12.2 Reinforced stem

The stem post shall be reinforced as given in Table 10.6

### 10.12.3 Reinforced chine

The corners of chines including the sharp corner of transoms, must be strengthened for their entire length according to Figure 10.4 and Table 10.6

### 10.12.4 Edge of deck and hull/deck joint

If the edge of the deck or the hull/deck joint is the widest part of the craft, they are to be strengthened to withstand loads from collision with piers, docking and handling of the craft ashore. The deck edge or hull/deck joint usually functions as a stiffener for hull topsides. The hull/deck joint shall be watertight for craft in design category A, B and C.

Table 10.6: Reinforced laminate areas, minimum fibre mass.

| **Structural member** | **Width on both sides of centreline** | **Single skin** [kg/m$^2$] | **Sandwich outer skin** Inner skin = 0,7 ·outer skin [kg/m$^2$] $w_{MIN}$ = Eq. 10.9 |
|---|---|---|---|
| Keel | 80 · $B_H$ | 1,0 + 2,2$w_{MIN}$ (bottom) 1) | 1,7 $w_{MIN}$ (bottom) 1) |
| Stem post | 40 · $B_H$ | 1,0 + 2,0$w_{MIN}$ (bottom) 1) | 1,5 $w_{MIN}$ (bottom) 1) |
| Chine | 40 · $B_H$ | 1,0 + 1,7$w_{MIN}$ (bottom) 1) | 1,2 $w_{MIN}$ (bottom) 1) |

1)see 10.8

## 10.13 Highly loaded structures

### 10.13.1 Engine foundations

Engine foundations shall be strong and stiff enough to carry the weight and loads of the engine. Such loads are:

- Weight of the engine and additional dynamic forces from craft's motion;
- Propulsion force (in cases where no thrust bearing is fitted);
- Torsion from the propeller;
- Vibration.

Engine foundations must be securely fixed primary athwarthship stiffeners like bulkheads or similar at both ends. Foundations shall be supported against buckling and collapsing, especially near engine holding down bolts.

Areas where the engine is fixed to the foundation must be strengthened with metal or a corresponding material.

### 10.13.2 Transoms for outboard and sterndrive engines

The transom design should ensure that the moment, mass forces and thrust from the outboard engine or sterndrive will be transferred into the primary structure without creating excessive stresses.

For engines with big power, the transom shall be engineered using the design loads given in Chapter 7 Clause 7.10.6.

For craft with smaller engine power, the following requirements apply, assuming sandwich construction of the transom.

The core is to consist of plywood, high density foam or corresponding material with a ultimate compressive stress of 4 MPa. If plywood is used, it has to be of durability class 1 or 2 according to ISO 12215-3:2002.

The thickness of the transom, measured between centers of skin laminates, shall be at least as given by formula (10.14)

$$t_{transomcore} = 35 + P^{0,5} \text{ [mm]} \qquad (10.14)$$

Where

P = total engine power installed on the transom, [kW]

The skin laminates shall be at least as given by formula (10.15)

$$w_{transomskin} = 0,14\, P^{0,55} \qquad \text{min. 1,40 kg/m2} \qquad (10.15)$$

### 10.13.3 Attachment of mooring and other highly loaded fittings

The foundations of mooring and towing fittings, rails, pulpits, lifeline stanchions, winches and similar items must be dimensioned to withstand loads as per ISO 15084.

### 10.13.4 Attachment of railings, handholds and lifeline hooking points

Attachment of railings, handholds and lifeline hooking points shall meet the requirements of ISO 15085.

### 10.13.5 Design of attachment points

The reinforcement of single-skin laminate at highly loaded fittings shall in general be carried out by adding additional laminate, installing plywood or metal reinforcements, or a combination of these.

Where highly loaded fittings are fixed to sandwich laminates, the core shall either have sufficient compressive strength or be replaced with spacers or single-skin laminate. The sandwich faces shall be locally reinforced with additional laminate.

### 10.13.6 Attachment of RIB-pontoon

The attachment of the RIB-pontoon to the rigid hull shall be designed to transmit the loads without stress peaks. Special attention shall be paid to the attachment in the bow and stern. The attachment shall be tested according to ISO 6185-3 for craft with a hull length of less than 8 m and ISO 6185-4 for bigger craft.

## 10.14 Design stresses

The design stresses to be used in the equations in this chapter are presented in Table 10.7. The determination of mechanical properties for composite materials, upon which the design stresses are based, is described in Chapter 8.

Table 10.7 Design stresses

| Structural member | Detail | Design stress |
|---|---|---|
| Single skin panels | | $\sigma_{UF}$/3,00 |
| Sandwich panels | Outer skin, □do | $\sigma_{UC}$/2,00 |
| | Inner skin, □di | $\sigma_{UT}$/2,00 |
| Sandwich core shear stress | Balsa | $\tau_U$/3,00 |
| | Foam, elongation < 20 % | $\tau_U$/2,73 |
| | Foam, elongation > 20 % | $\tau_U$/2,31 |
| Stiffeners | Crown | $\sigma_{UC}$/2,00 |
| | Attached plate | $\sigma_{UT}$/2,00 |
| | Webs | $\tau_{XY}$/2,00 |

# 11 PRODUCTION OF FIBRE-REINFORCED PLASTIC CRAFT

## 11.1 Objective

The requirements in this chapter apply to the manufacturing of craft of fiber reinforced plastics. A prerequisite for applying the rules in this chapter is that the raw-materials, the structure and scantlings meet the requirements in Chapters 8, 9 and 10 respectively.

The rules apply to individually built craft and, as applicable, to series built boats.

## 11.2 References

The requirements are partly based on the international standard ISO 12215-4 - Small craft — Hull construction and scantlings —Part 4: Workshop and manufacturing

## 11.3 Documentation

To verify the compliance with the requirements in this chapter, a production report for each individual craft is to be prepared. The report shall be readily identifiable by means of the Craft Identification Code, the yards' newbuilding number or similar and shall include the following information as relevant:

- Reference to the laminate schedule, see Chapter 10;
- The manufaturer, typecodes and batch numbers of the used laminating resins, fiber reinforcements, sandwich core materials;
- Lamination log (i.e. the sequence of reinforcement layers, curing, possible surface treatment after curing);
- Temperature and humidity log for the lamination area during the lamination and curing
- Reports of possible problems encountered during lamination and the remedy
- Thickness gauging report of the hull laminate
- Reports of mechanical tests and / or determination of fiber content

## 11.4 Workshop conditions

The laminating shop shall be substantially free from draughts so that the temperature can be kept constant during the laminating process. Ventilation systems shall ensure a suitable production environment throughout the entire lamination area.

The ambient temperature (i.e. temperature in the laminating shop) shall fulfill requirements by resin manufacturer or be at least 18° and the variation during the moulding process shall not be more than ±3 °C from the required nominal temperature. This temperature shall be reached at least 24 hours before the moulding starts.

A higher temperature is permitted during the curing process or in a separate curing space.

The lamination shop shall be insulated and built in such a way that the indoor temperature is not significantly affected by the outdoor temperature or sunlight. Windows shall be painted over or screened off if they are subject to direct sunlight.

The relative air humidity shall be as constant as possible and shall not exceed 80%. When using a spray lay-up technique, the relative air humidity shall be at least 40%.

Temperature and humidity shall be regularly recorded during the lamination and at least 48 hours after the lamination.

The moulding shop shall be clean and substantially free of dust. Grinding and woodworking shall be avoided during lamination and, when necessary, the laminate shall be cleaned thoroughly before continuing lamination.

## 11.5 Material storage

The purchase-, receiving- and storage processes shall assure that:

- The correct type of material is used for every craft;
- It can be traced which batch of raw-material is used for a particular craft.

Storage premises shall be dry and clean. In particular, packages of glassfibre reinforcement and sandwich core material shall be kept free from dust and moisture.

Raw materials shall be stored according to the raw-material manufacturer's recommendation. Materials, which have passed their expiry date must not be used for load-carrying structures.

Storage tanks for resin shall be equipped with an effective means of stirring which is to be carried out regularly.

Fibre reinforcements shall be kept for at least 48 hours at a temperature at least 2 oC higher and at a lower humidity than that of the moulding shop before they are transferred there. If the glassfibre has been sealed in plastic, the package shall be opened and kept for at least 48 hours in the moulding shop prior to use.

## 11.6 Lamination

### 11.6.1 Requirements for all types of laminates

All materials shall be according to the laminate schedule.

The amount and mixing of catalyst or hardener shall be according to the resin manufacturer's recommendation.

The reinforcement layers shall be applied in the sequence shown on the lamination drawings. The coverage, fiber directions, overlapping, layer drop-off and other details shall be according to the lamination drawings.

The lamination sequence shall be recorded such that it can be compared with the lamination drawings.

The fiber content of the cured laminate shall correspond to the nominal fiber content (see Chapter 9).

The amount of laminate to be laminated at one time, shall be planned such that the pot-life of the resin is not exceeded.

When laminating thick layers, care shall be taken not to damage the laminate by exothermic heat (the heat distortion temperature or glass transition temperature is not to be exceeded).

### 11.6.2 Polyester- and vinylester laminates

On all external surfaces there shall be an even gelcoat layer or an equivalent surface treatment applied after the lamination. The gelcoat shall have a thickness of 0.4 - 6 mm and shall be applied without significant thickness variation

As a minimum, the outermost layer of the hull laminate shall be made with isophtalic resin or vinylester resin. If the hull is made entirely using orthophtalic resin, the area beneath the loaded waterline plus 100 mm shall be treated with a minimum of two layers of epoxy paint

Powder-bound mat max 450g/m2 shall in general be used as the first reinforcement layer after the gelcoat in the hull.

In areas where no topcoat is applied, the final layer of the laminate shall contain paraffin or similar to prevent styrene evaporation and ensure that the curing will be satisfactory.

### 11.6.3 Epoxy laminates

If gelcoat is used together with epoxy laminate, the compatibility shall be documented

A layer of peel-ply shall be applied as the final layer before every curing. The peel-ply shall not be removed until the secondary lamination commences.

## 11.7 Sandwich construction

The type, thickness and density of the sandwich core shall be according to the laminating drawings.

Sandwich core materials with open cells on the surface shall be impregnated with resin or filling putty before bonding the core to the laminate.

When using core materials which are grid-scored, it shall be ensured that all cavities are filled with resin or putty.

When bonding sandwich cores to wet laminate without vacuum-bagging, the uncured laminate shall be at least 450 g/m2 on straight surfaces and 900 g/m2 on curved surfaces.

Sandwich cores without grid-scoring shall be bonded to the wet laminate with vacuum-bagging, evenly distributed weight or similar to ensure a good bond.

All joints and cavities in the core shall be filled with resin or putty before lamination is commenced. All unevennesses shall be removed.

Other techniques such as vacuum bagging may be used with less adhesive than required above if it can be demonstrated, that it results in an effective bond.

## 11.8 Secondary lamination

### 11.8.1 Polyester- and vinylester laminates

The surface treatment prior to secondary lamination shall be carried out in accordance with the resin manufacturer's recommendations. The following requirements are to be met as a minimum where no such recommendations are given:

- The cured laminate shall always be at least lightly sanded to remove irregularities from the surface before secondary lamination.
- When secondary lamination is started more than 48 hours after lamination of the previous layer, the laminate shall be grinded to expose fibers on the surface. All dust is to be removed.
- If there is paraffin on the surface, it shall be removed by washing or similar unless the previous lamination is so fresh that the paraffin will dilute into the next laminate layer.
- Gel- and topcoat shall always be removed from the bonding area before secondary bonding.
- Where peel-ply has been used, no sanding is required.

### 11.8.2 Epoxy laminates

After removal of the peel-ply possible (small) areas where the peel-ply has not been in contact with the laminate surface shall be sanded so to achieve a matt surface, and all dust shall be removed. After that the surface is to be washed with acetone unless it can be demonstrated by testing that an acceptable interlaminar shear strength (ILSS) can be achieved without acetone washing.

If the laminate has cured without peel-ply, the surface is to be washed with warm water or acetone, and let to dry. After that the surface is to be sanded thoroughly and cleaned with acetone prior to secondary lamination.

## 11.9 Adhesive bonding

Adhesive bonding shall be carried out according to the adhesive manufacturer's recommendation. Particularly, attention shall be given to the surface treatment of the bonding surfaces, the control of the bondline thickness and the usable working time to assemble the components to be bonded.

## 11.10 Curing

Gelcoat must not cure more than 24 hours before the first laminate layer is applied

With the exception of trimming the edges, the laminate must not be machined or be subject to loads during the curing.

The ambient temperature during curing must not be so high that the heat distortion temperature (HDT) for polyester and vinylester or the glass transition temperature for epoxies is reached in the laminate.

The curing shall be carried out within the temperature range recommended by the resin manufacturer.

When demoulding the cured components, they are to be properly supported to avoid distortion until all stiffeners are fitted.

## 11.11 Thickness gauging

The objective of the thickness gauging is to check, that the laminate is manufactured according to the laminating drawings. The measured thicknesses may be compared to the laminate thickness requirements calculated using the nominal fiber content (see Chapter 9 paragraph 9.2). Alternatively, the total fiber reinforcement area mass in the laminate can be approximatively determined on basis of the nominal fiber content and compared to the laminate drawings. The thickness gauging may be carried out using any of the following methods:

- With an reconized NDT-method after demoulding;
- By measuring directly from cut-outs in the laminate.

The thickness may be measured including gel- and topcoat, but in such case 0,6 mm shall be deducted from the measured thickness for the gelcoat and 0,4 mm for the topcoat

The thickness requirement is deemed to pass the requirement if, for the laminate area in question, the mean value of measurements exceeds the requirement from Chapter 10. In addition, no single measurement must not be less than 85% of the thickness requirement

## 11.12 Material testing

It shall be ensured, that the used raw materials in conjunction with the manufacturing process results in mechanical properties of the laminate which are at least as the assumed values for determination of the scantlings. The production control is connected to the assumptions in the scantling calculations through the mechanical properties of the laminates. There are three levels of production controls to choose from. These depend on the extent of the mechanical testing and monitoring of fiber content (see Chapter 9 Clause 9.11).

Mechanical testing shall be carried out according to the standards listed in Chapter 9.

# 12 STRUCTURAL DESIGN PRINCIPLES, ALUMINIUM

## 12.1 Objective

In this chapter is given requirements for the structural arrangement and the details of the structure. In addition, the principles for the assessment of the structure are defined. The purpose of the requirements presented in this chapter is to ensure that the structural arrangement and details of the craft has been carried out correctly taking into account the special properties of aluminium and that the procedures for assessing the structure are unambiguous.

This Chapter is to be used in conjunction with Chapter 7 (Design pressures and loads), Chapter 13 (Aluminium materials), Chapter 14 (Scantlings, aluminium craft) and Chapter 15 (Production of aluminium craft)

## 12.2 References

Requirements in chis chapter are partly based on international standard ISO 12215-6:2008. Small craft - Hull construction and scantlings -- Part 6: Structural arrangements and details.

## 12.3 Principles of structural analysis

### 12.3.1 Simplified calculation method

If the following conditions are met the scantlings may be analysed using the simplified calculation method:

- The structural arrangement is according to clause 6;
- The assumptions in clause 4 are valid;
- The craft does not have features, which makes it critical to global loads, see clause 12.5.

The "Simplified calculation method" means that the scantlings are determined using the formulae for panels, stiffeners etc. given in Chapter 14 using the loads in Chapter 7 and the allowable stresses given in Chapter 14.

### 12.3.2 Direct calculation of stresses and strains

For other cases than those mentioned in 12.3.1, general methods of strength of materials shall be followed. For such analysis, the loads given in Chapter 7 and the design stresses given in Chapter 13 shall be used.

## 12.4 Assumptions

### 12.4.1 Assumptions regarding local vs. global strength and stiffness

The scantling determination method presented in Chapter 14 is based on dimensioning against local loads. Normally, this will result in scantlings, which are adequate also for global loads. Where this is not the case, the dimensioning against global loads shall be assessed, see paragraph 12.5.

### 12.4.2 Hierarchy of the load carrying elements

When calculating requirements for panels and stiffeners according to Chapter 14, the hierarchy of structure is assumed to adhere to the following principles:

- The panel is supported by secondary stiffeners supported by primary stiffeners as indicated in Figure 12.1
- The primary stiffeners are at least twice as stiff as the secondary stiffeners, i.e:

$$\frac{I_p}{l_p^3} \Big/ \frac{I_s}{l_s^3} \geq 2 \qquad (12.1)$$

- The load is uniformly distributed;
- The edges of the panel are clamped;
- The ends of the stiffeners are fixed.

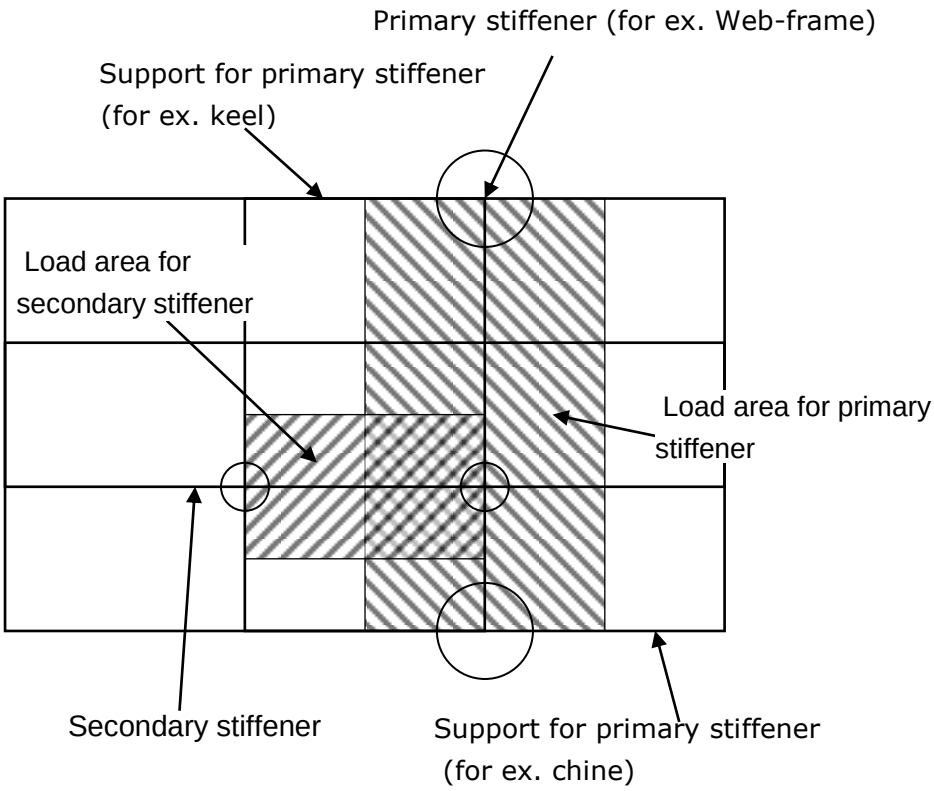


Figure 12.1. Hierarchy of stiffeners.

## 12.5 Global strength and stiffness

In the following cases also the global strength and stiffness must be investigated:

- If the bottom is only transversely stiffened and its relative speed $V/\sqrt{L_{WL}}>6$
- If there are (large) openings in the deck;
- If the ratio of the hull length to the hull depth $L_H/D_{MAX}>12$

The global strength and stiffness shall be determined according to ISO 12215-6 Annex D. At least the deck shall be checked against buckling (compressive stress in the deck). For craft with only transverse stiffening in the bottom also the strength of the bottom shall be checked.

For multihull craft, the strength shall be assessed in the global load cases given in Chapter 7.

## 12.6 Structural arrangement

### 12.6.1 Displacement craft, design category D

Boats in design category D with $V/\sqrt{LWL}\leq 6$, may be stiffened by the keel, gunwale and transverse stiffeners alone. Boats in higher design categories may only be stiffened by transverse framing alone if an assessment of the global strength and stiffness is carried out, see paragraph 12.5.

### 12.6.2 Planing craft

Boats with V/√LWL>6, should in general have longitudinal stiffening in the bottom. The details of longitudinal stiffeners shall meet the requirements of paragraph 7.

### 12.6.3 Support for longitudinal stiffeners

The bottom longitudinal stiffeners shall in general be suppoerted by transverse stiffeners such as bulkheads, web frames or deep floors, which are to be designed to carry the load acting on the hull area in question, see Figure 12.1. Principle of load areas. The details of transverse stiffeners shall meet the requirements in paragraph 12.7.

### 12.6.4 Keels, stem and chines

The craft shall have a reinforced keel, stem and chines according to Chapter 14.

### 12.6.5 Torsional stiffness and -strength

The torsional strength and stiffness is considered adequate if the craft has one of the following items:

- A full deck;
- Tranverse bulkheads;
- A strengthened bulwark.

### 12.6.6 Superstructure support points

The loads imposed by superstructures shall be led into bulkheads, webframes or other primary structure.

## 12.7 Hull stiffeners

### 12.7.1 Continuity and termination of stiffeners

In craft where V /√LWL>6, the bottom longitudinal stiffeners shall be continuous. Terminating of stiffeners on a panel between stiffeners shall be avoided. With the exceptions of paragraph 12.9.2, the ends of stiffeners shall be fastened to other stiffeners

### 12.7.2 Straightness and local discontinuities of stiffeners

Hull stiffeners shall be as straight as possible. At most 30 degrees are accepted, provided buckling support is arranged at the points where the direction change. Aprupt changes is the cross section of the stiffeners shall be avoided. If the stiffeners have local discontinuities, the transition shall be smooth and corners shall be rounded, radius at least 30 mm.

### 12.7.3 Safety against buckling

The cross section of stiffeners shall be such that they are not prone to buckling. Stiffeners with one web without flange are not allowed at bottom area. Stiffeners with one web must not be fastened at an angle exceeding 30 degrees relative to the normal against the panel.

### 12.7.4 Transverse stiffeners

The hull transverse stiffeners such as bulkheads, webframes and deep floors, shall extend from side to side of the hull. If the section modulus of the keel meets the requirements in chapter 14 paragraph 8, the stiffeners span may be taken to the keel when calculating the section modulus requirement according to chapter 14 paragraph 5, else the distance between the chines shall be used.

### 12.7.5 Floating stiffeners

Arrangements, where stiffeners are not fastened to the bottom (floating stiffener), assessed according to ISO 12215-6: 6.3.4.

## 12.8 Other stiffeners

The stiffening arrangement of decks, superstructures and bulkheads shall comprise of secondary stiffeners supported by primary stiffeners according to the principles in paragraph 12.4.2.

## 12.9 Construction details

### 12.9.1 Joining plates of different thickness

The thickness difference between adjacent hull plates shall not exceed 25% of the thicker plate unless the edge of the thicker plate is bevelled.

### 12.9.2 Fastening and joints of stiffeners

The stiffener including its fastening shall be able to carry the bending moment and shear force in Chapter 14 paragraph 14.8 without exceeding the design stresses given in Chapter 14.

If a stiffener is continuous through a web frame or bulkhead, a bracket is not required at the intersection. If the stiffener is cut off for instance at a watertight bulkhead, the end(s) shall be connected by means of brackets or similar to ensure, that the stiffness and strength of joint corresponds to that of a continuous stiffener

The ends of stiffeners shall, with the following exceptions, be connected to other stiffeners. Termination of stiffeners within a plate panel is allowed under the following conditions.

(a) In the bottom structure, all design categories, side structure of craft in design category A and B:

- The stiffener ends at an angle of at least 15 degrees relative to a line through the last support point and the stiffener end, or

- The stiffener ends at a stiff area, for instance near the keel or chine;
- In both case the bending and shear stress must not exceed half of the design stress as given in Chapter 14 and
- The end of the stiffener shall be sniped at least 3:1 and
- The distance from the stiffener end to a stiff point is at most 35 mm.

(b) Other applications, all design categories

- The end of the stiffener shall be sniped at least 3:1 and the distance from the stiffener end to a stiff point is at most 35 mm

### 12.9.3 Openings in load-bearing structures

*12.9.3.1 General*

The effect of openings in load-bearing structures shall be taken into account. Opening shall, where necessary, be supported at their edges by flanges or similar.

*12.9.3.2 Openings in hull stiffeners*

With the exceptions given below, openings in hull stiffeners are not allowed, unless it can be shown by calculation that the stiffener meets the requirements of Chapter 14 including the opening.

In the webs, no openings are to be located within 20% of the length of the stiffeners from the support points. In other locations of the webs openings with a height not exceeding 50% of the web height and a length not exceeding 75% of the web height are allowed.

### 12.9.4 Sharp edges

Sharp edges or notches are not allowed in loaded structures.

### 12.9.5 Other details

Structures, which accumulate water shall be avoided as far as possible. Locations, where water may accumulate shall be readily accessible (definition see chapter 31).

### 12.9.6 Corrosion

All items fitted to the underwater hull, which are not the same material as the hull, shall be isolated for instance by sealant to avoid crevice corrosion. Sacrificial anodes are required if the craft is equipped with an AC shore connection.

## 12.10 Welding

The weld joint geometry shall be according to Table 12.1.

Table 12.1. Geometry of welding joints

| Joint type | Joint dimensions | Comments |
|---|---|---|
| MIG | | |
| 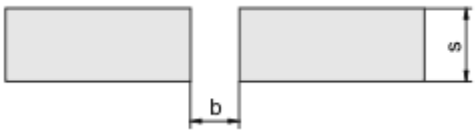 | s = 1.5...5 mm<br>b = 0...2 mm | Welding from one side only. Back-up strip shall be used. |
| 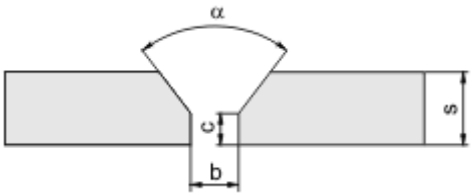 | s = 5...25 mm<br>b = 0...3 mm<br>c = 1.5...3 mm<br>α = 60...100° | Largest angle recommended for under-up position. Gouging and re-welding shall be carried out. |
| 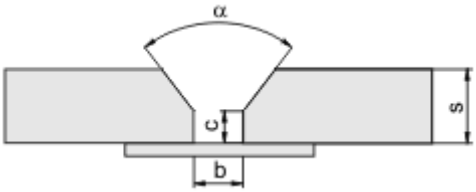 | s = 8...25 mm<br>b = 3...7 mm<br>c = 2...4 mm<br>α = 40...60° | Smallest joint angle may be used up to 15 mm and with the largest root cap. Vertical position, under-up and side-in require a large root cap. |
| 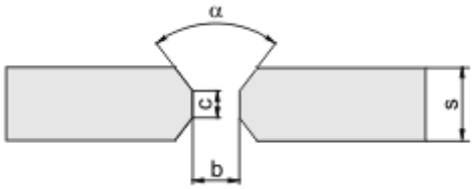 | s = 12...25 mm<br>b = 0...2 mm<br>c = 3...5 mm<br>α = 50...70° | Specially allowed for automatic welding. Semiautomatic processes may be used in all positions, and gouging shall be performed prior to welding from the other side. |
| TIG | | |

| | | |
|---|---|---|
| | s < 2 mm | |
| 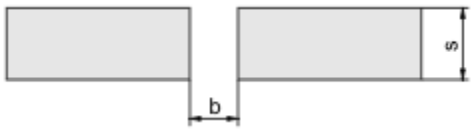 | s < 4 mm<br><br>b = 0...2 mm | Welding from one side. |
| 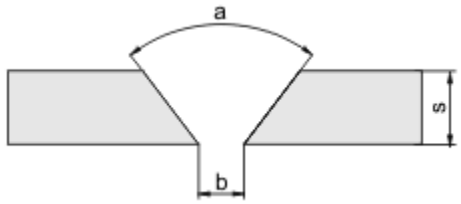 | s = 4...10 mm<br><br>b = 0...2 mm<br><br>α = 60...70° | Back-up strip shall be used in a horizontal position. |

s= Material thickness, mm
b = Root gap, mm
c = Root face, mm
α = Joint angle

Table 12.3. Welding shall be carried out in accordance with the following table. The notations in the table are the minimum requirements.

| Application | Design category | | | |
|---|---|---|---|---|
| | A | B | C | D |
| Hull shell plating butt welds s <5 mm | CDB | CDB | CSB | CSB |
| Hull shell plating butt welds s => 5mm | CDB | CDB | CDB | - |
| Other plating butt welds s < 5 mm | CSB | CSB | CSB | CSB |
| Other plating butt welds s => 5 mm | CDB | CDB | CDB | - |
| Hull chines fillet welds s <5 mm | CDF | CDF | CSF | CSF |
| Hull chines fillet welds s=>5 mm | CDF | CDF | CDF | - |
| Other watertight fillet welds | CDF | CDF | CSF | CSF |
| Engine foundations | CDF | CDF | CSF | - |
| Brackets, supports for highly loaded items | CDF | CDF | CDF | - |
| Hull transverse frame ends (also at keel, | CDF | CDF | CDF | CDF |

| | | | | |
|---|---|---|---|---|
| chine) | | | | |
| Hull transverse frames at engine foundations | CDF | CDF | CDF | - |
| Hull transverse frames elsewhere | DF | DF | DF | DF |
| Hull and other stiffener ends | CDF | CDF | CDF | CDF |
| Hull and other stiffeners elsewhere | DF | DF | DF | DF |

Notations for butt weld types:

CSB = Continuous single-sided butt weld, no back-opening required, s < 5mm

CDB = Continuous double-sided butt weld, back-opening required, s => 5mm

Notations for filled welds:

CSF = Continuous single-sided fillet weld

CDF = Continuous double-sided fillet weld

DF = Intermittent (staggered or chain) double-sided fillet weld

When hull and deck stiffeners are welded using intermittent welding, the welds shall be at least as long as the break. Shorter welds may be considered for other types of stiffeners that are permitted to be welded with intermittent welds. The length of the weld must never be less than 40% of the joint length. The ends of stiffeners shall always be welded from both sides.

The a-dimension of the weld shall be at least 2.5 mm or (0,35 t+1,5) whichever is greater, where t is the thickness of the plate [mm]. The a-dimension never need to be taken more than 7 mm for plate thicknesses up to 30 mm.

# 13 ALUMINIUM MATERIALS

## 13.1 Objective

This chapter presents the aluminium materials suitable for boat building. Mechanical properties for the different alloys and tempers are given. These values are intended for use with the scantlings formulae given in Chapter 14. Provided herein are also guidelines for selection of welding consumables with different base metal combinations.

This chapter is to be used with chapters 7 (design pressuseres and loads) 12 (design principles, aluminium), 14 (scantlings, aluminium), 15 (production of aluminium boats).

## 13.2 References

This chapter refers to the following international standards:

- ISO 12215-3. Small craft. Hull construction and scantlings. Part 3: Materials: Steel, aluminium alloys, wood, other materials.
- ISO 12215-5:2008 - Hull construction and scantlings -- Part 5: Design pressures for monohulls, design stresses, scantlings determination

## 13.3 Documentation

The following documents are needed to verify the requirements of this chapter:

- The material certificates of the plates and profiles
- Material certificate for the welding consumables

## 13.4 Mechanical properties of aluminium alloys

### 13.4.1 Group 1. Non-heat treatable alloys

The alloys in this group are used for plates. Examples of commonly used alloys are presented in Table 13.1.

Table 13.1. Example of Group 1 aluminium alloys

| Standard marking | Mixture | Condition | $\sigma_U$ | $\sigma_{UW}$ | $\sigma_Y$ | $\sigma_{YW}$ |
|---|---|---|---|---|---|---|
| EN AW-5052 | AlMg2,5 | H32 | 210 | 170 | 160 | 65 |
| EN AW-5052 | AlMg2,5 | H34 | 235 | 170 | 180 | 65 |
| EN AW-5754 | AlMg3 | 0/H111 | 225 | 190 | | 80 |
| EN AW-5754 | AlMg3 | H24 | 240 | 190 | 190 | 80 |
| EN AW-5154A | AlMg3,5 | 0/H111 | 215 | 215 | 85 | 85 |
| EN AW-5154A | AlMg3,5 | H24 | 240 | 215 | 200 | 85 |
| EN AW-5086 | AlMg4 | 0/H111 | 240 | 240 | 100 | 100 |
| EN AW-5086 | AlMg4 | H34 | 275 | 240 | 185 | 100 |
| EN AW-5083 | AlMg4,5Mn0,7 | 0/H111 | 275 | 275 | 125 | 125 |
| EN AW-5083 | AlMg4,5Mn0,7 | H32 | 305 | 275 | 215 | 125 |
| AA 5059 Alustar | AlMg5-6 | 0/H111 | 330 | 300 | 160 | 160 |
| AA 5059 Alustar | AlMg5-6 | H32 | 370 | 300 | 270 | 160 |
| EN AW-5383 | AlMg4,5Mn0,9 | 0/H111 | 290 | 290 | 145 | 145 |
| EN AW-5383 | AlMg4,5Mn0,9 | H32 | 305 | 290 | 220 | 145 |

### 13.4.2 Group 2. Heat treatable alloys

The alloys in this group are used for profiles. Examples of commonly used alloys are presented in Table 13.2.

Table 13.2. Example of Group 2 aluminium alloys

| Standard marking | Mixture | Condition | $\sigma_U$ | $\sigma_{UW}$ | $\sigma_Y$ | $\sigma_{YW}$ |
|---|---|---|---|---|---|---|
| EN AW-6060 | AlMgSi | T5, T6 | 190 | 95 | 150 | 65 |
| EN AW-6061 | AlMg1SiCu | T5, T6 | 260 | 165 | 240 | 115 |
| EN AW-6061 | AlMg1SiCu | T5, T6 | 245 | 165 | 205 | 115 |
| EN AW-6063 | AlMg0,7Si | T5 | 150 | 100 | 110 | 65 |
| EN AW-6063 | AlMg0,7Si | T6 | 205 | 100 | 170 | 65 |
| EN AW-6005A | AlSiMg(A) | T5, T6 | 260 | 165 | 215 | 115 |
| EN AW-6005A | AlSiMg(A) | T5, T6 | 250 | 165 | 215 | 115 |
| EN AW-6082 | AlSi1MgMn | T5, T6 | 310 | 170 | 260 | 115 |
| EN AW-6082 | AlSi1MgMn | T5, T6 | 290 | 170 | 240 | 115 |
| EN AW-6106 | AlMgSiMn | T6 | 240 | 240 | 195 | 195 |

### 13.4.3 Other alloys

Alloys, which contain cupper must not be used

## 13.5 Welding consumables

The welding consumables used shall be chosen on the basis of base metals to be welded together, as indicated in Table 13.3

Table 13.3. Applicability of welding consumables

| **Materials to be pieced together** | **AlMg2,5<br>AlMg3** | **AlMg4,5Mn<br>AlMg5** | **Group 2,<br>all mixtures** |
|---|---|---|---|
| **Group 2,<br>all mixtures** | AlMg5<br>AlMg4,5Mn<br>AlSi5 | AlMg5<br>AlMg4,5Mn<br>AlSi5 | AlSi5<br>AlMg5<br>AlMg4,5Mn |
| **AlMg4,5Mn<br>AlMg5** | AlMg5<br>AlMg4,5Mn | AlMg5<br>AlMg4,5 | |
| **AlMg2,5<br>AlMg3** | AlMg5<br>AlMg4,5Mn<br>AlMg3 | | |

# 14 SCANTLINGS DETERMINATION, ALUMINIUM

## 14.1 Objective

This chapter presents the formulae for scantling determination of aluminium craft.

The given formulae are to be used only in conjunction with the design loads given in Chapter 7, using the mechanical properties given in Chapter 13 and the principles regarding the structural arrangement given in Chapter 12.

## 14.2 References

The scantlings determination method in this chapter is in general that of the ISO 12215-5:2008 - Hull construction and scantlings -- Part 5: Design pressures for monohulls, design stresses, scantlings determination. To ensure that workboat can cope with harsh operating conditions, additions regarding plate thickness against impact loads and corrosion have been added.

## 14.3 Documentation

To verify that the requirements presented in this chapter are met, the following documentation is required:

- Structural design drawings, including, if appropriate:
  - Longitudinal cross-section;
  - Transverse cross-sections;
  - Welding methods and welding dimensions;
- Material certificates for the plates and profiles used;
- Scantlings calculations showing the rule requirements for different structural members and the attained values.

## 14.4 List of symbols

Symbols used in several Chapters are given in Chapter 1. In Table 14.1 some symbols used in this Chapter are listed. In addition, there are symbols defined in their context.

Table 14.1. Symbols used in Chapter 14.

| Symbol | Unit | Meaning | Reference |
|---|---|---|---|
| $p$ | kPa | Design pressure | Chapter 7 |
| $l$ | mm | Longer side of panel | |
| $b$ | mm | Shorter side of panel | |
| $s$ | mm | Fram spacing, width of design area | |
| $l_U$ | mm | Span of stiffener | |

| | | | |
|---|---|---|---|
| $t$ | mm | Thickness of panel | |
| $W$ | $cm^3$ | Section modulus | |
| $\sigma_d$ | MPa | Allowable normal stress | Section 9 |
| $\tau_d$ | MPa | Allowable shear stress | Section 9 |

## 14.5 Dimension of panels

The dimensions of panels are given for some typical cases in Figure 14.1.

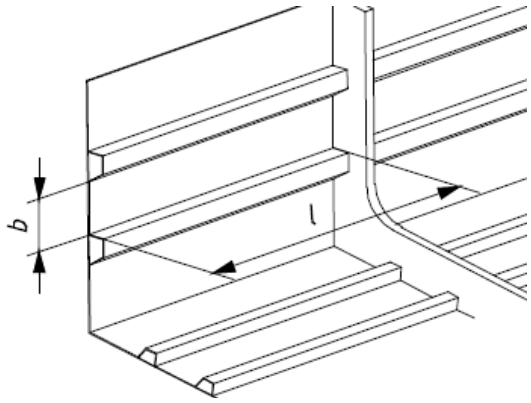


a) Rectangle shaped panel. Note, that l and b are measured to the web of the stiffener.

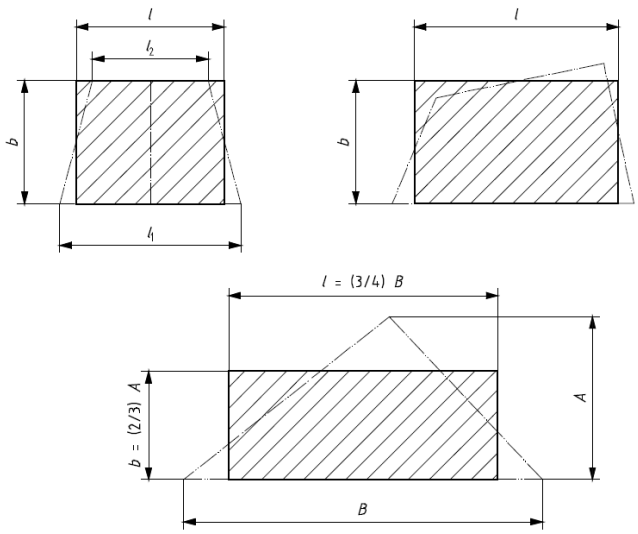


b) Some other shapes

Figure 14.1 Measures for typical panels

## 14.6 Scantlings requirements, aluminium panels

The thickness of aluminium plating shall not be less than the greater of formulae 14.1 and 14.2:

$$t \geq b \cdot k_C \cdot \sqrt{\frac{p \cdot k_2}{1000 \cdot \sigma_d}} \text{ [mm]} \qquad (14.1)$$

Where

$k_C$ = curvature correction factor, see 14.7.2

P = design pressure, see Chapter 7.

$k_2$ = panel aspect correction factor, see. 14.7.3

$\sigma_D$ = allowable stress. see 14.11.

The plating thickness shall never be less than given by formula 14.2:

$$t_{min} = 1{,}15 \cdot f_1 \cdot \left(t_0 + k_3 \cdot V_{MAX} + k_4 \cdot M_{LDC}^{0{,}33}\right) \text{ [mm]} \qquad (14.2)$$

Where

Factors $t_0$, $k_1$, $k_3$ and $k_4$ can be found in Table 14.2 anf factor f1 from Clause 14.7.1.

Table 14.2. Factors used in formula 14.2

| **Component** | $t_0$ | $k_3$ | $k_4$ |
|---|---|---|---|
| Bottom plate | 1,0 | 0,02 | 0,1 |
| Side plating and transom | 1,0 | 0 | 0,1 |
| Cargo deck, load *Q* [t/m$^2$] | 2 + 0,5·*Q* | 0 | 0 |

If the clamping of an edge of a panel is less than that of a panel continuing past its edge stiffeners, the thickness requirement must be adjusted to conform to the actual edge clamping.

## 14.7 Correction factors for panels

### 14.7.1 Correction for alloy strength

The correction factor f1 used in the minimum thickness formula takes the strength of the alloy into consideration. The factor shall be determined with the following formula:

$$f_1 = \sqrt{\frac{125}{\sigma_y}} \qquad (14.3)$$

Where

$\sigma_Y$ = yield strength of alloy, [MPa]

### 14.7.2 Correction based on panel curvature

The correction factor takes account of the effect the curvature has on the strength of steel panels; kc must be at least 0.8, however.

Table 14.5. Correction factor for panel on the basis of curvature

| ***c/b*** | $k_C$ |
|---|---|
| 0…0,03 | 1,0 |
| 0,03…0,18 | 1,1 – 3,33 · *c/b* |
| >0,18 | 0,5 |

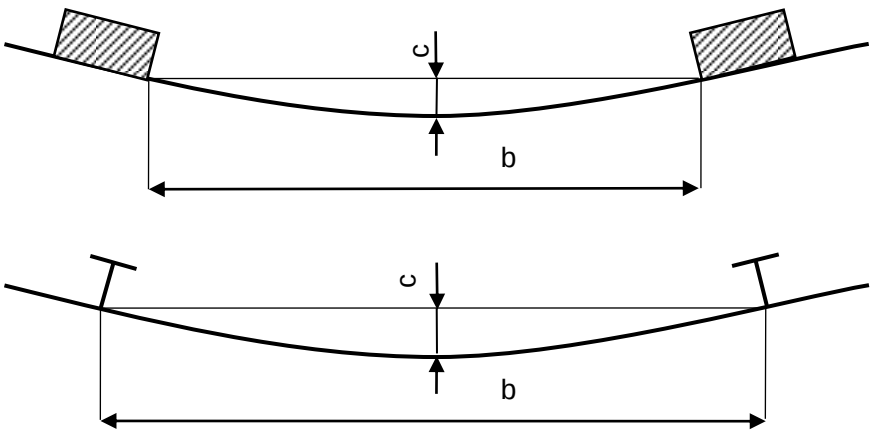


Figure 14.2. Measures needed for curvature correction factor.

### 14.7.3 Correction based on panel aspect ratio.

Correction on the basis of panel aspect ratio. The factor k2, which takes the effect of the panel aspect ratio on the bending stress into consideration, can be found in table 14.4

Table 14.4. Panel aspect ratio correction factor k2.

| Aspect ratio | Correction factor for bending stress |
|---|---|
| *l/b* | $k_2$ |
| >2,0 | 0,500 |
| 2,0 | 0,497 |
| 1,9 | 0,493 |
| 1,8 | 0,487 |
| 1,7 | 0,479 |
| 1,6 | 0,468 |
| 1,5 | 0,454 |
| 1,4 | 0,436 |
| 1,3 | 0,412 |
| 1,2 | 0,383 |
| 1,1 | 0,349 |
| 1,0 | 0,308 |

## 14.8 Stiffeners

### 14.8.1 Section modulus

The section modulus of stiffeners, including the effective flange calculated according to 6.3, shall not be less than given by formula 14.4.

$$W \geq \frac{83{,}3 \cdot k_{CS} \cdot p \cdot s \cdot l_U^2}{\sigma_d} \text{ [cm}^3\text{]} \qquad (14.4)$$

Where

$l_U$ stiffener span, not needed to be taken greater than 330·LH [mm]

$k_{CS}$ correction factor for stiffener curvature, see Table 14.5.

$\sigma_d$ design stress for aluminium alloy, [MPa], see clause 14.11

Table 14.5. Stiffener correction factor $k_{CS}$

| ***c/b*** | ***kcs*** |
|---|---|
| 0…0,03 | 1,0 |
| 0,03…0,18 | $1{,}1 - 3{,}33 - c_U/l_U$ |
| 0,18… | 0,5 |

If the end fixity of one or both ends of the stiffener differs from the situation, where a stiffener is continuous over its support points, the required section modulus shall be corrected to correspond to the real end fixity.

### 14.8.2 Effective flange

A width equal to the width of the stiffener plus 60 times the thickness of the plate the stiffener is attached to may be included as an effective flange for calculating the stiffener's section modulus.

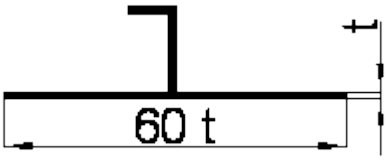


Figure 14.3. Effective flange

### 14.8.3 Shear area of stiffener webs

The cross-sectional area of the stiffener shear web shall be at least as given by formula 14.6.

$$A_W = \frac{k_{SA} \cdot p \cdot s \cdot l_U}{\tau_d} \cdot 10^{-6} \text{ [cm}^2\text{]} \qquad (14.6)$$

$k_{SA}$ = factor for cross-sectional area.

- $k_{SA}$ = 5 if the stiffener is attached to plating
- $k_{SA}$ = 7.5 for floating stiffeners

$t_d$ = allowable shear stress for webs, MPa

## 14.9 Reinforcements

The keel structure shall be appropriately reinforced to withstand the loads of docking and/or trailering. This is considered fulfilled if the requirements for the keel strake thickness and/or section modulus given in Table 14.6 below are met. The plate thickness of the keel strake shall not be less than that given in Table 14.6. If the keel is protected by a profile, the section modulus shall not be less than that given in Table 14.6. When calculating the section modulus for the keel profile, a width of the plate adjacent to the profile equal to 60 times the plate thickness may be included on both sides.

Table 14.6. Plating thickness and section modulus of keel.

| **Construction element** | **Requirement** |
|---|---|
| Keel strake if no keel profile, b = 10·Lh [mm] | $t_k = 1.5 \cdot t_{min}$ (bottom) see 9.2.3. |
| Section modulus (SM) of the keel | $W_k = 0.85 \cdot m_{LCC} \cdot L_H$ [mm$^3$] |

If the edge of the deck or the hull/deck joint is the widest part of the craft, they are to be strengthened to withstand loads from collision with piers, docking and handling of the craft ashore. The deck edge or hull/deck joint usually functions as a stiffener for hull topsides. The hull/deck joint shall be watertight for craft in design category A, B and C.

## 14.10 Highly loaded structures

### 14.10.1 Engine foundations

Engine foundations shall be strong and stiff enough to carry the weight and loads of the engine. Such loads are:

- Weight of the engine and additional dynamic forces from craft's motion;
- Propulsion force (in cases where no thrust bearing is fitted);
- Torsion from the propeller;
- Vibration.

Engine foundations must be securely fixed primary athwarthship stiffeners like bulkheads or similar at both ends. Foundations shall be supported against buckling and collapsing, especially near engine holding down bolts.

### 14.10.2 Transoms for outboard and sterndrive engines

The transom design should ensure that the moment, mass forces and thrust from the outboard engine or sterndrive will be transferred into the primary structure without creating excessive stresses.

For engines with big power, the transom shall be engineered using the design loads given in Chapter 7 Clause 7.10.6.

### 14.10.3 Attachment of mooring and other highly loaded fittings

The foundations of mooring and towing fittings, rails, pulpits, lifeline stanchions, winches and similar items must be dimensioned to withstand loads as per ISO 15084.

### 14.10.4 Attachment of railings, handholds and lifeline hooking points

Attachment of railings, handholds and lifeline hooking points shall meet the requirements of ISO 15085.

### 14.10.5 Attachment of RIB-pontoon

The attachment of the RIB-pontoon to the rigid hull shall be designed to transmit the loads without stress peaks. Special attention shall be paid to the attachment in the bow and stern. The attachment shall be tested according to ISO 6185-3 for craft with a hull length of less than 8 m and ISO 6185-4 for bigger craft.

## 14.11 Design stresses

The design stresses to be used in the equations in this chapter are presented in Table 14.7. Mechanical properties for commonly used aluminium alloys can be found in Chapter 13.

Table 14.7. Design stresses

| Structural member | Allowed stress, MPa |
|---|---|
| Panels | $\square_d = 0{,}6 \cdot \square_{UW}$ tai $0{,}9 \cdot \square\square_{YW}$ |
| Stiffeners, normal stress | $\square_d = 0{,}7 \cdot \square_{YW}$ |
| Stiffeners, shear stress | $\square_d = 0{,}7 \cdot \square_{YW}$ |

$\sigma_{UW}$ = Tensile strength, welded

$\sigma_{YW}$ = Yield strength, welded

# 15 PRODUCTION OF ALUMINIUM BOATS

## 15.1 Objective

The rules in this chapter deal with the production of aluminium craft. A prerequisite for applying the rules in this chapter is that the raw-materials, the structure and scantlings meet the requirements in Chapters 12, 13 and 14 respectively. The rules apply to individually built boats and, as applicable, to series built boats.

## 15.2 References

This chapter is partially based on international standard ISO 12215-4 - Small craft — Hull construction and scantlings —Part 4: Workshop and manufacturing.

Reference is made also to the following documents:

- EN 9606-2:2002. Qualification test of welders. Fusion welding. Aluminium and aluminium alloys.
- EN ISO 15614-2:2005. Specification and qualification of welding procedures for metallic materials -- Welding procedure test -- Part 2: Arc welding of aluminium and its alloys
- SFS-EN ISO 10042: Welding. Arc-welded joints in aluminium and its alloys. Quality levels for imperfections.
- SFS-EN 970: Non-destructive examination of fusion welds. Visual examination

## 15.3 Documentation

To verify the compliance with the requirements in this chapter, a production report for each individual craft is to be prepared. The report shall be readily identifiable by means of the Craft Identification Code, the yards' newbuilding number or similar and shall include the following information as relevant:

- Reference to the used structural drawings, see Chapter 14.
- The material certificates for plates, profiles and welding consumables;
- The qualification certificates of the welders which have participated in the welding of the hull;
- Reference to relevant welding procedure specifications (WPS);
- Protocol of visual inspection of welds;
- Reports of radiography and/or other NDT inspection carried out;
- Reports of possible problems encountered during lamination and the remedy;

## 15.4 Workshop conditions

Aluminium plates, profiles, welding consumables and other aluminium materials shall be stored in a dry location separated from other metals.

The workshop shall be essentially clean and there must not be any cutting of other metals during the welding process.

The cutting and welding of aluminium shall be carried out in a dry place under cover, protected from wind and weather.

Welding of aluminium shall not be carried out at temperatures below -5 ºC. Where the outdoor temperature may fall below 0 ºC, it shall be possible to heat the workshop.

## 15.5 Materials

It shall be possible to show, with the aid of material certificates, that the plating and profiles which are used in a particular craft, are of the alloy and temper specified on the construction drawings.

The material shall be straight and undamaged, and of the dimensions and alloy specified on the approved drawings.

## 15.6 Cutting and forming

Hardened aluminium alloys shall not be formed by the application of heat. Where cold forming is required, care shall be taken to avoid local damage to the material. When bending plates and profiles, the methods and the bend radius shall ensure that excessive local strain leading to cracks in the material does not occur.

## 15.7 Welding

### 15.7.1 Welder’s qualification

Welding shall only be carried out by qualified persons. In craft of design category A and B an official welder's qualification according to EN 9606-2:2002 or equivalent standard is required. For craft of design category C or D, the qualification may be assessed by the beforementioned test or by assessing of the welds at the workshop.

In general, MIG or TIG welding methods shall be used. Other methods may be utilised if it can be demonstrated that the results is at least as good as for welds carried out with MIG or TIG.

### 15.7.2 Welding Procedure Specification

In the manufacturing of craft of design category A and B the welding shall be carried out in accordance with welding procedure specifications (WPS) tried out prior to the construction and which are demonstrated to result in welds with adequate quality. Welding procedure specifications shall be prepared for all relevant joint types, welding positions and material thicknesses and with the welding machines to be used for the construction of the craft. The welding procedure specifications shall be carried out in accordance with the standard EN ISO 15614-2. For craft of design category C and D no formally approved welding procedure specifications are required.

### 15.7.3 Surveys

The welds in the hull, deck and other critical structures are to be visually inpected according to EN ISO 970.

In addition, for craft of design category A and B, inspection by radiography shall be carried out. The sampling is to be decided on basis of the visual inspection.

Required weld quality

The quality level of welds in all load-bearing structures shall be at least C according to the standard SFS-EN ISO 10042. This applies to the following items:

For all boats the hull including the following structural members:

- Plating and transom;
- Keel and stem;
- Bulkheads, webframes and stiffeners;
- Engine foundations;
- Possible other stiffeners and foundations.

For fully enclosed boats also:

- Decks and their stiffeners;
- Superstructures and their stiffeners;

# 16 DESIGN PRINCIPLES, STEEL

## 16.1 Objective

In this chapter is given requirements for the structural arrangement and the details of the structure. In addition, the principles for the assessment of the structure are defined. The purpose of the requirements presented in this chapter is to ensure that the structural arrangement and details of the craft has been carried out correctly taking into account the special properties of steel and that the procedures for assessing the structure are unambiguous.

This Chapter is to be used in conjunction with Chapter 7 (Design pressures and loads), Chapter 17 (Steel materials), Chapter 18 (Scantlings, steel craft) and Chapter 19 (Production of steel craft)

## 16.2 References

Requirements in chis chapter are partly based on international standard ISO 12215-6:2008. *Small craft - Hull construction and scantlings -- Part 6: Structural arrangements and details.*

## 16.3 Principles of structural analysis

### 16.3.1 Simplified calculation method

If the following conditions are met the scantlings may be analysed using the *simplified calculation method:*

- The structural arrangement is according to clause 6;
- The assumptions in clause 4 are valid;
- The craft does not have features, which makes it critical to global loads, see clause 16.5.

The "Simplified calculation method" means that the scantlings are determined using the formulae for panels, stiffeners etc. given in Chapter 18 using the loads in Chapter 7 and the allowable stresses given in Chapter 18.

### 16.3.2 Direct calculation of stresses and strains

For other cases than those mentioned in 16.3.1, general methods of strength of materials shall be followed. For such analysis, the loads given in Chapter 7 and the design stresses given in Chapter 18 shall be used.

## 16.4 Assumptions

### 16.4.1 Assumptions regarding local vs. global strength and stiffness

The scantling determination method presented in Chapter 18 is based on dimensioning against local loads. Normally, this will result in scantlings, which are adequate also for global loads. Where this is not the case, the dimensioning against global loads shall be assessed, see paragraph 16.5.

### 16.4.2 Hierarchy of the load carrying elements

When calculating requirements for panels and stiffeners according to Chapter 18, the hierarchy of structure is assumed to adhere to the following principles:

- The panel is supported by secondary stiffeners supported by primary stiffeners as indicated in Figure 16.1
- The primary stiffeners are at least twice as stiff as the secondary stiffeners, i.e:

$$\frac{I_p}{l_p^3} / \frac{I_s}{l_s^3} \geq 2 \qquad (12.1)$$

- The load is uniformly distributed;
- The edges of the panel are clamped;
- The ends of the stiffeners are fixed.

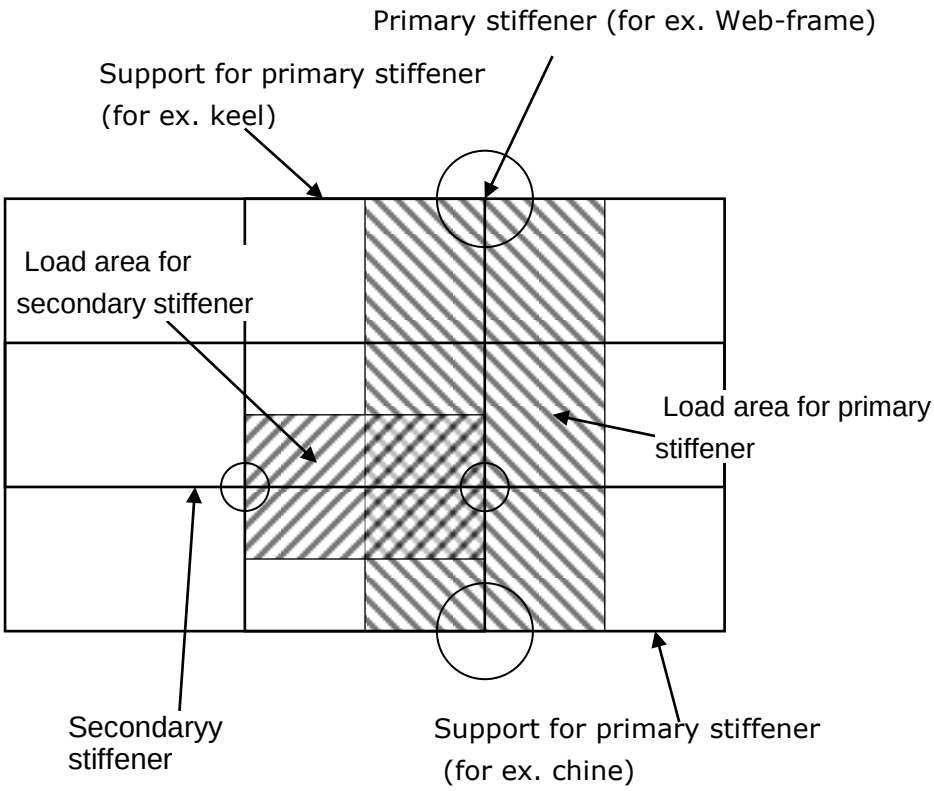


Figure 16.1. Hierarchy of stiffeners.

## 16.5 Global strength and stiffness

In the following cases also the global strength and stiffness must be investigated:

- If the bottom is only transversely stiffened and its relative speed $V/\sqrt{L_{WL}}>6$
- If there are (large) openings in the deck;
- If the ratio of the hull length to the hull depth $L_H/D_{MAX}>12$

The global strength and stiffness shall be determined according to ISO 12215-6 Annex D. At least the deck shall be checked against buckling (compressive stress in the deck). For craft with only transverse stiffening in the bottom also the strength of the bottom shall be checked.

For multihull craft, the strength shall be assessed in the global load cases given in Chapter 7.

## 16.6 Structural arrangement

### 16.6.1 Displacement craft, design category D

Boats in design category D with $V/\sqrt{LWL}\leq 6$, may be stiffened by the keel, gunwale and transverse stiffeners alone. Boats in higher design categories may only be stiffened by transverse framing alone if an assessment of the global strength and stiffness is carried out, see paragraph 16.5.

### 16.6.2 Planing craft

Boats with $V/\sqrt{L_{WL}}>6$, should in general have longitudinal stiffening in the bottom. The details of longitudinal stiffeners shall meet the requirements of paragraph 16.7.

### 16.6.3 Support for longitudinal stiffeners

The bottom longitudinal stiffeners shall in general be supported by transverse stiffeners such as bulkheads, web frames or deep floors, which are to be designed to carry the load acting on the hull area in question, see Figure 16.1. Principle of load areas. The details of transverse stiffeners shall meet the requirements in paragraph 16.7.

### 16.6.4 Keels, stem and chines

The craft shall have a reinforced keel, stem and chines according to Chapter 18.

### 16.6.5 Torsional stiffness and -strength

The torsional strength and stiffness is considered adequate if the craft has one of the following items:

- A full deck;
- Tranverse bulkheads;
- A strengthened bulwark.

### 16.6.6 Superstructure support points

The loads imposed by superstructures shall be led into bulkheads, webframes or other primary structure.

## 16.7 Hull stiffeners

### 16.7.1 Continuity and termination of stiffeners

In craft where $V/\sqrt{L_{WL}}>6$, the bottom longitudinal stiffeners shall be continuous. Terminating of stiffeners on a panel between stiffeners shall be avoided. With the exceptions of paragraph 16.9.2, the ends of stiffeners shall be fastened to other stiffeners

### 16.7.2 Straightness and local discontinuities of stiffeners

Hull stiffeners shall be as straight as possible. At most 30 degrees are accepted, provided buckling support is arranged at the points where the direction change. Aprupt changes is the cross section of the stiffeners shall be avoided. If the stiffeners have local discontinuities, the transition shall be smooth and corners shall be rounded, radius at least 30 mm.

### 16.7.3 Safety against buckling

The cross section of stiffeners shall be such that they are not prone to buckling. Stiffeners with one web without flange are not allowed at bottom area. Stiffeners with one web must not be fastened at an angle exceeding 30 degrees relative to the normal against the panel.

### 16.7.4 Transverse stiffeners

The hull transverse stiffeners such as bulkheads, webframes and deep floors, shall extend from side to side of the hull. If the section modulus of the keel meets the requirements in Chapter 18 paragraph 8, the stiffeners span may be taken to the keel when calculating the section modulus requirement according to Chapter 18 paragraph 5, else the distance between the chines shall be used.

### 16.7.5 Floating stiffeners

Arrangements, where stiffeners are not fastened to the bottom (floating stiffener), assessed according to ISO 12215-6 clause 6.3.4.

## 16.8 Other stiffeners

The stiffening arrangement of decks, superstructures and bulkheads shall comprise of secondary stiffeners supported by primary stiffeners according to the principles in paragraph 16.4.2.

## 16.9 Construction details

### 16.9.1 Joining plates of different thickness

The thickness difference between adjacent hull plates shall not exceed 25% of the thicker plate unless the edge of the thicker plate is bevelled.

### 16.9.2 Fastening and joints of stiffeners

The stiffener including its fastening shall be able to carry the bending moment and shear force in Chapter 18 paragraph 14.8 without exceeding the design stresses given in Chapter 18.

If a stiffener is continuous through a web frame or bulkhead, a bracket is not required at the intersection. If the stiffener is cut off for instance at a watertight bulkhead, the end(s) shall be connected by means of brackets or similar to ensure, that the stiffness and strength of joint corresponds to that of a continuous stiffener

The ends of stiffeners shall, with the following exceptions, be connected to other stiffeners. Termination of stiffeners within a plate panel is allowed under the following conditions.

(a) In the bottom structure, all design categories, side structure of craft in design category A and B:

- The stiffener ends at an angle of at least 15 degrees relative to a line through the last support point and the stiffener end, or
- The stiffener ends at a stiff area, for instance near the keel or chine;
- In both case the bending and shear stress must not exceed half of the design stress as given in Chapter 18 and
- The end of the stiffener shall be sniped at least 3:1 and
- The distance from the stiffener end to a stiff point is at most 35 mm.

(b) Other applications, all design categories

- The end of the stiffener shall be sniped at least 3:1 and the distance from the stiffener end to a stiff point is at most 35 mm

### 16.9.3 Openings in load-bearing structures

#### *16.9.3.1 General*

The effect of openings in load-bearing structures shall be taken into account. Opening shall, where necessary, be supported at their edges by flanges or similar.

#### *16.9.3.2 Openings in hull stiffeners*

With the exceptions given below, openings in hull stiffeners are not allowed, unless it can be shown by calculation that the stiffener meets the requirements of Chapter 18 including the opening.

In the webs, no openings are to be located within 20% of the length of the stiffeners from the support points. In other locations of the webs openings with a height not exceeding 50% of the web height and a length not exceeding 75% of the web height are allowed.

### 16.9.4 Sharp edges

Sharp edges or notches are not allowed in loaded structures.

### 16.9.5 Other details

Structures, which accumaulate water shall be avoided as far as possible. Locations, where water may accumulate shall be readily accessible (definition see chapter 31).

### 16.9.6 Corrosion

All items fitted to the underwater hull, which are not the same material as the hull, shall be isolated for instance by sealant to avoid crevice corrosion. Sacrificial anodes are required if the craft is equipped with an AC shore connection.

## 16.10 Welding

The weld joint geometry shall be according to Table 16.1.

Table 16.1. Geometry of welding joints

| Joint type | Joint dimensions | Comments |
|---|---|---|
| | MIG | |
| 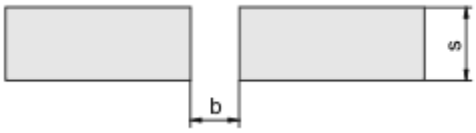 | s = 1.5...5 mm<br><br>b = 0...2 mm | Welding from one side only. Back-up strip shall be used. |
| 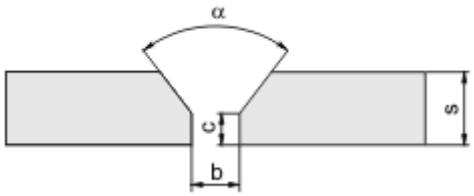 | s = 5...25 mm<br><br>b = 0...3 mm<br><br>c = 1.5...3 mm<br><br>□ = 60...100º | Largest angle recommended for under-up position. Gouging and re-welding shall be carried out. |

| | | |
|---|---|---|
| 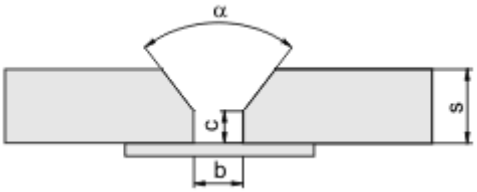 | s = 8...25 mm<br><br>b = 3...7 mm<br><br>c = 2...4 mm<br><br>□ = 40...60º | Smallest joint angle may be used up to 15 mm and with the largest root cap. Vertical position, under-up and side-in require a large root cap. |
| 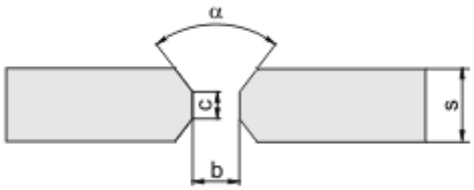 | s = 12...25 mm<br><br>b = 0...2 mm<br><br>c = 3...5 mm<br><br>□ = 50...70º | Specially allowed for automatic welding. Semiautomatic processes may be used in all positions, and gouging shall be performed prior to welding from the other side. |
| | TIG | |
| | s < 2 mm | |
| 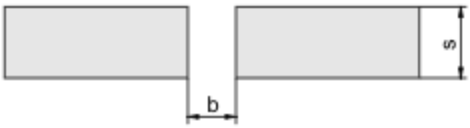 | s < 4 mm<br><br>b = 0...2 mm | Welding from one side. |
| 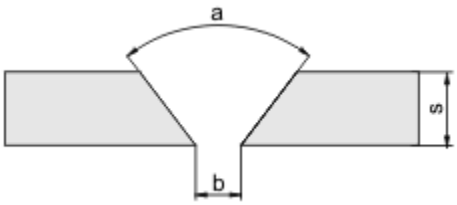 | s = 4...10 mm<br><br>b = 0...2 mm<br><br>□ = 60...70º | Back-up strip shall be used in a horizontal position. |

s= Material thickness, mm

b = Root gap, mm

c = Root face, mm

α = Joint angle, deg

Table 16.3. Welding shall be carried out in accordance with the following table. The notations in the table are the minimum requirements.

| Application | Design category | | | |
|---|---|---|---|---|
| | A | B | C | D |
| Hull shell plating butt welds s <5 mm | CDB | CDB | CSB | CSB |
| Hull shell plating butt welds s => 5mm | CDB | CDB | CDB | - |
| Other plating butt welds s < 5 mm | CSB | CSB | CSB | CSB |
| Other plating butt welds s => 5 mm | CDB | CDB | CDB | - |
| Hull chines fillet welds s <5 mm | CDF | CDF | CSF | CSF |
| Hull chines fillet welds s=>5 mm | CDF | CDF | CDF | - |
| Other watertight fillet welds | CDF | CDF | CSF | CSF |
| Engine foundations | CDF | CDF | CSF | - |
| Brackets, supports for highly loaded items | CDF | CDF | CDF | - |
| Hull transverse frame ends (also at keel, chine) | CDF | CDF | CDF | CDF |
| Hull transverse frames at engine foundations | CDF | CDF | CDF | - |
| Hull transverse frames elsewhere | DF | DF | DF | DF |
| Hull and other stiffener ends | CDF | CDF | CDF | CDF |
| Hull and other stiffeners elsewhere | DF | DF | DF | DF |

Notations for butt weld types:

CSB = Continuous single-sided butt weld, no back-opening required, s < 5mm

CDB = Continuous double-sided butt weld, back-opening required, s => 5mm

Notations for filled welds:

CSF = Continuous single-sided fillet weld

CDF = Continuous double-sided fillet weld

DF = Intermittent (staggered or chain) double-sided fillet weld

When hull and deck stiffeners are welded using intermittent welding, the welds shall be at least as long as the break. Shorter welds may be considered for other types of stiffeners that are permitted to be welded with intermittent welds. The length of the weld must never be less than 40% of the joint length. The ends of stiffeners shall always be welded from both sides.

The a-dimension of the weld shall be at least 2.5 mm or (0,35 t+1,5) whichever is greater, where t is the thickness of the plate [mm]. The a-dimension never need to be taken more than 7 mm for plate thicknesses up to 30 mm.

# 17 STEEL MATERIALS

## 17.1 Normal strength steel

Unless otherwise specified, steel with a yield strength of 240 MPa is assumed as the basis for the rules. This is referred to as “normal strength steel”. The use of steel grades with better mechanical properties is to be considered separately according to their yield strength and ultimate strength and ultimate strain.

## 17.2 Steel grades for low temperatures

The use of normal strength steel with normal impact toughness is permitted for commercial craft that do not have an additional “Ice strengthening” notation. For ice-strengthened craft, steel with enhanced toughness in cold temperatures is to be used

# 18 SCANTLINGS DETERMINATION, STEEL

## 18.1 Objective

This chapter presents the formulae for scantling determination of steel craft.

The given formulae are to be used only in conjunction with the design loads given in Chapter 7, using the principles regarding the structural arrangement given in Chapter 16.

## 18.2 References

The scantlings determination method in this chapter is in general that of the *ISO 12215-5:2008 - Hull construction and scantlings -- Part 5: Design pressures for monohulls, design stresses, scantlings determination.* To ensure that workboat can cope with harsh operating conditions, additions regarding plate thickness against impact loads and corrosion have been added.

## 18.3 Documentation

To verify that the requirements presented in this chapter are met, the following documentation is required:

- Structural design drawings, including, if appropriate:
  - Longitudinal cross-section;
  - Transverse cross-sections;
  - Welding methods and welding dimensions;
- Material certificates for the plates and profiles used;
- Scantlings calculations showing the rule requirements for different structural members and the attained values.

## 18.4 List of symbols

Symbols used in several Chapters are given in Chapter 1. In Table 18.1 some symbols used in this Chapter are listed. In addition, there are symbols defined in their context.

Table 18.1. Symbols used in Chapter 18.

| Symbol | Unit | Meaning | Reference |
|---|---|---|---|
| $p$ | kPa | Design pressure | Chapter 7 |
| $l$ | mm | Longer side of panel | |
| $b$ | mm | Shorter side of panel | |
| $s$ | mm | Fram spacing, width of design area | |
| $l_U$ | mm | Span of stiffener | |
| $t$ | mm | Thickness of panel | |

| | | | |
|---|---|---|---|
| $W$ | cm³ | Section modulus | |
| $\sigma_d$ | MPa | Allowable normal stress | Chapter 9 |
| $\tau_d$ | MPa | Allowable shear stress | Chapter 9 |

## 18.5 Dimension of panels

The dimensions of panels are given for some typical cases in Figure 18.1.

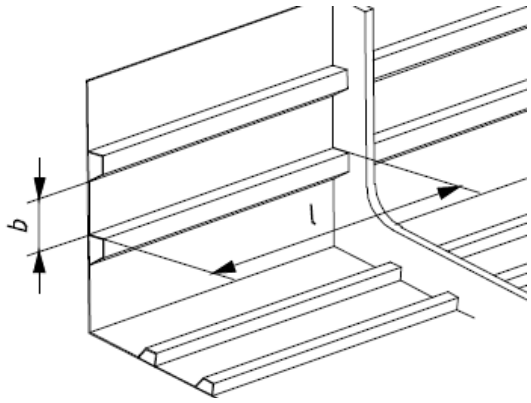


c) Rectangle shaped panel. Note, that l and b are measured to the web of the stiffener.

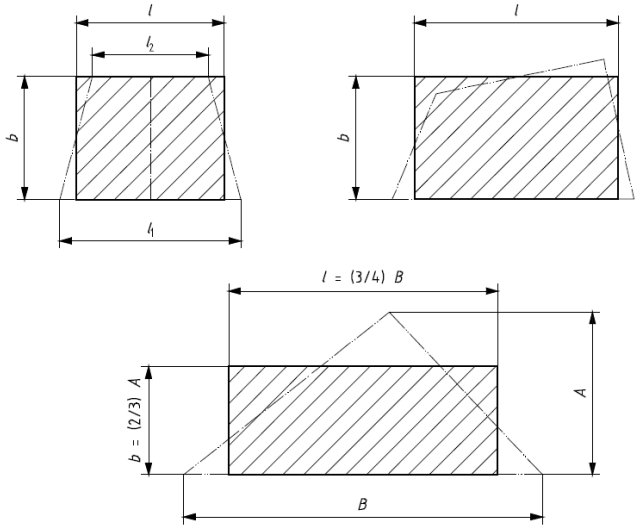


d) Some other shapes

Figure 18.1 Measures for typical panels

## 18.6 Scantlings requirements, steel panels

The thickness of steel plating shall not be less than the greater of formulae 14.1 and 14.2:

$$t \geq b \cdot k_c \cdot \sqrt{\frac{p \cdot k_2}{1000 \cdot \sigma_d}} \text{ [mm]} \qquad (18.1)$$

Where

$k_C$ = curvature correction factor, see 14.7.2

P = design pressure, see Chapter 7.

$k_2$ = panel aspect correction factor, see. 14.7.3

$\sigma_D$ = allowable stress. see 18.11.

The plating thickness shall never be less than given by formula 14.2:

$$t_{min} = 1{,}15 \cdot f_1 \cdot \left(t_0 + k_3 \cdot V_{MAX} + k_4 \cdot M_{LDC}^{0{,}33}\right) \text{ [mm]} \qquad (18.2)$$

Where

Factors $t_0$, $k_1$, $k_3$ and $k_4$ can be found in Table 18.2 anf factor $f_1$ from Clause 18.7.1.

Table 18.2. Factors used in formula 14.2

| **Rakenneosa** | $t_0$ | $k_3$ | $k_4$ |
|---|---|---|---|
| Bottom plater | 0,9 | 0 | 0,02 |
| Side plating and transom | 0,9 | 0 | 0 |
| Cargo deck, load *Q* [t/m$^2$] | 1,5 + 0,5 · Q | 0 | 0 |

If the clamping of an edge of a panel is less than that of a panel continuing past its edge stiffeners, the thickness requirement must be adjusted to conform to the actual edge clamping.

## 18.7 Correction factors for panels

### 18.7.1 Correction for alloy strength

The correction factor $f_1$ used in the minimum thickness formula takes the strength of the alloy into consideration. The factor shall be determined with the following formula:

$$f_1 = \sqrt{\frac{240}{\sigma_y}} \qquad (18.3)$$

Where

$\sigma_Y$ = yield strength of steel alloy, [MPa]

### 18.7.2 Correction based on panel curvature

The correction factor takes account of the effect the curvature has on the strength of steel panels; kc must be at least 0.8, however.

Table 18.5. Correction factor for panel on the basis of curvature

| ***c/b*** | ***$k_C$*** |
|---|---|
| 0…0,03 | 1,0 |
| 0,03…0,18 | 1,1 – 3,33 · *c/b* |
| >0,18 | 0,5 |

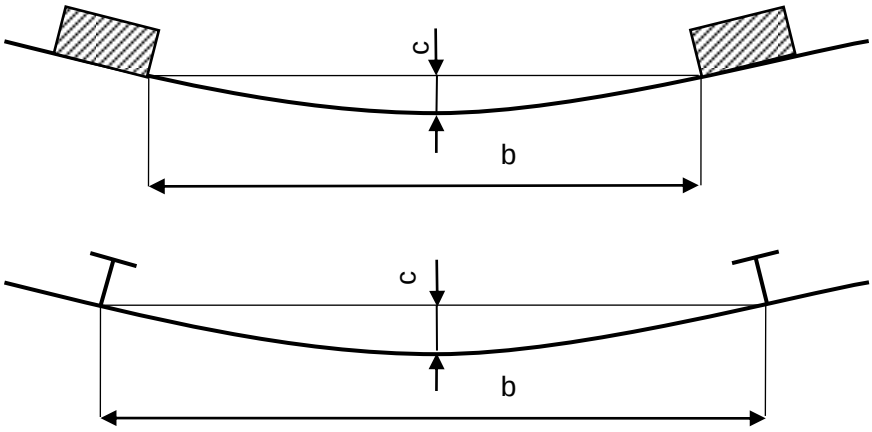


Figure 18.2. Measures needed for curvature correction factor.

### 18.7.3 Correction based on panel aspect ratio.

Correction on the basis of panel aspect ratio. The factor k2, which takes the effect of the panel aspect ratio on the bending stress into consideration, can be found in table 18.4

Table 18.4. Panel aspect ratio correction factor k2.

| Aspect ratio | Correction factor for bending stress |
|---|---|
| *l/b* | $k_2$ |
| >2,0 | 0,500 |
| 2,0 | 0,497 |
| 1,9 | 0,493 |
| 1,8 | 0,487 |
| 1,7 | 0,479 |
| 1,6 | 0,468 |
| 1,5 | 0,454 |
| 1,4 | 0,436 |
| 1,3 | 0,412 |
| 1,2 | 0,383 |
| 1,1 | 0,349 |
| 1,0 | 0,308 |

## 18.8 Stiffeners

### 18.8.1 Section modulus

The section modulus of stiffeners, including the effective flange calculated according to 6.3, shall not be less than given by formula 18.4.

$$W \geq \frac{83{,}3 \cdot k_{CS} \cdot p \cdot s \cdot l_U^2}{\sigma_d} \text{ [cm}^3\text{]} \qquad (18.4)$$

Where

$l_U$ stiffener span, not needed to be taken greater than $330 \cdot L_H$ [mm]

$k_{CS}$ correction factor for stiffener curvature, see Table 18.5.

$\sigma_d$ design stress for steel alloy, [MPa], see clause 18.11

Table 18.5. Stiffener correction factor $k_{CS}$

| ***c/b*** | ***kcs*** |
|---|---|
| 0…0,03 | 1,0 |
| 0,03…0,18 | $1{,}1 - 3{,}33 - c_U/l_U$ |
| 0,18… | 0,5 |

If the end fixity of one or both ends of the stiffener differs from the situation, where a stiffener is continuous over its support points, the required section modulus shall be corrected to correspond to the real end fixity.

### 18.8.2 Effective flange

A width equal to the width of the stiffener plus 80 times the thickness of the plate the stiffener is attached to may be included as an effective flange for calculating the stiffener's section modulus.

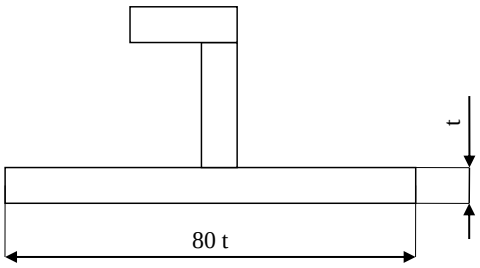


Figure 18.3. Effective flange

### 18.8.3 Shear area of stiffener webs

The cross-sectional area of the stiffener shear web shall be at least as given by formula 18.6.

$$A_W = \frac{k_{SA} \cdot p \cdot s \cdot l_U}{\tau_d} \cdot 10^{-6} \text{ [cm}^2\text{]} \qquad (18.6)$$

$k_{SA}$ = factor for cross-sectional area.

- $k_{SA}$ = 5 if the stiffener is attached to plating
- $k_{SA}$ = 7.5 for floating stiffeners

$t_d$ = allowable shear stress for webs, MPa, see 18.11

## 18.9 Reinforcements

The keel structure shall be appropriately reinforced to withstand the loads of docking and/or trailering. This is considered fulfilled if the requirements for the keel strake thickness and/or section modulus given in Table 18.6 below are met. The plate thickness of the keel strake shall not be less than that given in Table 18.6. If the keel is protected by a profile, the section modulus shall not be less than that given in Table 18.6. When calculating the section modulus for the keel profile, a width of the plate adjacent to the profile equal to 80 times the plate thickness may be included on both sides.

Table 18.6. Plating thickness and section modulus of keel.

| **Construction element** | **Requirement** |
|---|---|
| Keel strake if no keel profile, b = 10·Lh [mm] | $t_k = 1.5 \cdot t_{min}$ (bottom) see Eq.18.2. |
| Section modulus (SM) of the keel | $W_k = 0.85 \cdot m_{LCC} \cdot L_H$ [mm$^3$] |

If the edge of the deck or the hull/deck joint is the widest part of the craft, they are to be strengthened to withstand loads from collision with piers, docking and handling of the craft ashore. The deck edge or hull/deck joint usually functions as a stiffener for hull topsides. The hull/deck joint shall be watertight for craft in design category A, B and C.

## 18.10 Highly loaded structures

### 18.10.1 Engine foundations

Engine foundations shall be strong and stiff enough to carry the weight and loads of the engine. Such loads are:

- Weight of the engine and additional dynamic forces from craft's motion;
- Propulsion force (in cases where no thrust bearing is fitted);
- Torsion from the propeller;
- Vibration.

Engine foundations must be securely fixed primary athwarthship stiffeners like bulkheads or similar at both ends. Foundations shall be supported against buckling and collapsing, especially near engine holding down bolts.

### 18.10.2 Transoms for outboard and sterndrive engines

The transom design should ensure that the moment, mass forces and thrust from the outboard engine or sterndrive will be transferred into the primary structure without creating excessive stresses.

For engines with big power, the transom shall be engineered using the design loads given in Chapter 7 Clause 7.10.6.

### 18.10.3 Attachment of mooring and other highly loaded fittings

The foundations of mooring and towing fittings, rails, pulpits, lifeline stanchions, winches and similar items must be dimensioned to withstand loads as per ISO 15084.

### 18.10.4 Attachment of railings, handholds and lifeline hooking points

Attachment of railings, handholds and lifeline hooking points shall meet the requirements of ISO 15085.

### 18.10.5 Attachment of RIB-pontoon

The attachment of the RIB-pontoon to the rigid hull shall be designed to transmit the loads without stress peaks. Special attention shall be paid to the attachment in the bow and stern. The attachment shall be tested according to ISO 6185-3 for craft with a hull length of less than 8 m and ISO 6185-4 for bigger craft.

Return to the cover page

## 18.11 Design stresses

The design stresses to be used in the equations in this chapter are presented in Table 18.7.

Table 14.7. Design stresses

| Structural member | Allowed stress, MPa |
|---|---|
| Panels | $\square_d = 0{,}6 \cdot \square_{UW}$ tai $0{,}9 \cdot \square\square_{YW}$ |
| Stiffeners, normal stress | $\square_d = 0{,}7 \cdot \square_{YW}$ |
| Stiffeners, shear stress | $\square_d = 0{,}7 \cdot \square_{YW}$ |

$\sigma_{UW}$ = Tensile strength, welded

$\sigma_{YW}$ = Yield strength, welded

# 19 PRODUCTION OF STEEL BOATS

## 19.1 Objective

The rules in this chapter deal with the production of steel craft. A prerequisite for applying the rules in this chapter is that the raw-materials, the structure and scantlings meet the requirements in Chapters 16, 17 and 18 respectively. The rules apply to individually built boats and, as applicable, to series built boats.

## 19.2 References

This chapter is partially based on international standard *ISO 12215-4 - Small craft — Hull construction and scantlings —Part 4: Workshop and manufacturing.*

Reference is made also to the following documents:

- EN 9606-1:2002. Qualification test of welders. Fusion welding of steel.
- EN ISO 15614-1:2005. Specification and qualification of welding procedures for metallic materials - Welding procedure test - Part 1 : arc and gas welding of steels and arc welding of nickel and nickel alloys.
- ISO 5817:2014. Welding -- Fusion-welded joints in steel, nickel, titanium and their alloys (beam welding excluded) -- Quality levels for imperfections
- SFS-EN 970: Non-destructive examination of fusion welds. Visual examination

## 19.3 Documentation

To verify the compliance with the requirements in this chapter, a production report for each individual craft is to be prepared. The report shall be readily identifiable by means of the Craft Identification Code, the yards' newbuilding number or similar and shall include the following information as relevant:

- Reference to the used structural drawings, see Chapter 18.
- The material certificates for plates, profiles and welding consumables;
- The qualification certificates of the welders which have participated in the welding of the hull;
- Reference to relevant welding procedure specifications (WPS);
- Protocol of visual inspection of welds;
- Reports of radiography and/or other NDT inspection carried out;
- Reports of possible problems encountered during lamination and the remedy;

## 19.4 Workshop conditions

Steel plates, profiles, welding consumables and other steel materials shall be stored in a dry location to prevent corrosion.

Welding of steel shall not be carried out at temperatures below -5 ºC. Where the outdoor temperature may fall below 0 ºC, it shall be possible to heat the workshop.

Workshops where welding using shield gas is carried out shall be essentially free of draught.

## 19.5 Materials

It shall be possible to show, with the aid of material certificates, that the plating and profiles which are used in a particular craft, are of the correct type according to the construction drawings.

The material shall be straight and undamaged, and of the dimensions and alloy specified on the approved drawings.

## 19.6 Cutting and forming

Where cold forming is required, care shall be taken to avoid local damage to the material.

When bending plates and profiles, the methods and the bend radius shall ensure that excessive local strain leading to cracks in the material does not occur.

## 19.7 Welding

### 19.7.1 Welder’s qualification

Welding shall only be carried out by qualified persons. In craft of design category A and B an official welder's qualification according to EN 9606-1:2002 or equivalent standard is required. For craft of design category C or D, the qualification may be assessed by the before mentioned test or by assessing of the welds at the workshop.

In general, MIG or TIG welding methods shall be used. Other methods may be utilised if it can be demonstrated that the results are at least as good as for welds carried out with MIG or TIG.

### 19.7.2 Welding Procedure Specification

In the manufacturing of craft of design category A and B the welding shall be carried out in accordance with welding procedure specifications (WPS) tried out prior to the construction and which are demonstrated to result in welds with adequate quality. Welding procedure specifications shall be prepared for all relevant joint types, welding positions and material thicknesses and with the welding machines to be used for the construction of the craft. The welding procedure specifications shall be carried out in accordance with the standard EN ISO 15614-1. For craft of design category C and D no formally approved welding procedure specifications are required.

### 19.7.3 Surveys

The welds in the hull, deck and other critical structures are to be visually inspected according to EN ISO 970.

In addition, for craft of design category A and B, inspection by radiography shall be carried out. The sampling is to be decided on basis of the visual inspection.

### 19.7.4 Required weld quality

The quality level of welds in all load-bearing structures shall be at least C according to the standard ISO 5817. This applies to the following items:

For all boats the hull including the following structural members:

- Plating and transom;
- Keel and stem;
- Bulkheads, webframes and stiffeners;
- Engine foundations;
- Possible other stiffeners and foundations.

For fully enclosed boats also:

- Decks and their stiffeners;
- Superstructures and their stiffeners;

# 20 RUDDER AND STEERING SYSTEMS

## 20.1 Objective

The purpose of the rules in this chapter is to ensure proper and safe steering of the craft, while considering her Design Category and maximum speed, and to make sure that the craft can proceed into a safe harbour even when the main steering is out of order.

## 20.2 References

In this chapter reference is made to the following documents:

- ISO 12215-8:2009 Small Craft – Hull construction and scantlings – Part 8: Rudders
- ISO 8847:2004 Small Craft – Steering gear –Cable and pulley systems
- ISO 9775:1994 Remote steering systems for single outboard motors of 15 kW to 40 kW
- EN 28848:1993/A1:2000 Small craft – Remote steering systems
- EN 29775:1993 Small craft - Remote steering systems for single outboard motors of 15 kW to 40 kW power
- ISO 10592:1995/A1:2000 Small craft – Hydraulic steering systems
- ISO 4413:2010 Hydraulic power – General rules and safety requirements for systems and their components
- ISO 13929:2001 Small craft – Steering gear – Geared link systems
- ISO 25197:2012 Small craft – Electrical/electronic control systems for steering, shift and throttle

## 20.3 Documentation

For assessment of the requirements given in this chapter the following documentation is required:

- drawings of the rudder and its installation, showing the rudder geometry and construction;
- the materials used;
- measurements for the parts;
- dimensioning calculations showing;
- rudder stock;
- tiller or quadrant connection to the stock; and
- dimensioning of the bearings; and
- conformity declarations for CE-marked components

## 20.4 Steering arrangements

### 20.4.1 Main steering system

The main steering system shall enable proper and safe steering at all speeds considering the Design Category of the craft.

Steering shall normally be accomplished with a fixed steering system, able to produce the required torque or force for proper steering. In craft where manual steering provides sufficient power, remote control is not required.

For craft with the additional notation Ice Reinforcement there are additional requirements for the steering system given in Chapter 39.

### 20.4.2 Emergency steering system

Except for the mentioned cases below, for all craft with remote steering a rapidly available emergency steering system is required. This system shall have proper strength, and enable steering at minimum 4 knots speed, retaining the steering control using the input from one person at a safe force level.

A separate emergency steering system is not required provided:

- the craft has two rudders, each with separate steering system, and can be steered even if either one of the systems is out of order;
- the craft has at least two propulsion units, enabling the craft to be steered even if the main steering system is out of order;
- the craft can be steered in some other way, for example with a bow thruster; or
- the craft has outboard- or sterndrive engine, or waterjet propulsion, and belongs to Design Category C or D.

In case the steering system is electrical, emergency steering is always required.

In connection with emergency steering a dedicated lookout may be used.

The emergency steering shall be assessed in connection with the sea trials (see Chapter 30).

### 20.4.3 Requirements for steering systems

The steering system components shall be CE-marked according to item 20.2, or be approved by an independent notified body using a method ensuring the corresponding safety level.

The dimensioning of the steering system shall rely entirely on the torque from the rudder or drive unit as calculated in this chapter.

When industrial hydraulic components are used, the installation including components shall meet the requirements in ISO 4413.

Electrical steering systems shall be approved for marine use by a Classification Society, or shall have CE-marking according to standard ISO 25197.

Cable steering with a single cable must not be used with engine power over 74 kW if the speed of the craft exceeds $7 \cdot \sqrt{L_H}$ knots.

For craft with the additional notation Ice Reinforcement there are additional requirements for the steering system given in Chapter 39.

## 20.5 Rudders

### 20.5.1 Rudder design, general

The rudder and its parts shall be designed so they can stand the applied loads in all conditions. This includes also light grounding when the craft is stationary, and ice loads for craft intended for such services (see Chapter 39)

Generally, the rudder area shall be sufficient for good control also at low speed in conditions when only one engine is in use.

### 20.5.2 Fail-safe design

Rudders to be designed paying attention to grounding, and collision with objects in the water.

This requirement is considered fulfilled if there is a strong skeg or similar in front of the rudder. Alternatively, this can be arranged with local watertight compartmentation, preventing a leak from reaching spaces above the rudder in case the bottom is holed (limited unsinkability, see Chapter 6).

VTT EXPERT SERVICES LTD

Return to the cover page

Table 20.1. Rudder stock material properties [MPa]

| Material | Compo-sition | $\sigma_y$[a] *unwelded* | $\sigma_u$[a] *unwelded* | $\sigma_{yw}$ *welded* | $\sigma_{uw}$ *welded* | $\sigma_D$[a] *unwelded* | $\sigma_{Dw}$ *welded* | *E ESTIMATE* |
|---|---|---|---|---|---|---|---|---|
| Stainless steel | | | | | | | | |
| AISI 304 | X5 Cr Ni 18.9 | 195 | 500 | 195 | 195 | **195** | **97** | $2.05*10^5$ |
| AISI 316,316L | X5 Cr Ni Mo 17.2.2 | 195 | 500 | 195 | 195 | **195** | **97** | |
| AISI 329 Not coldworked | X3 Cr Ni Mo N 27-5-2 | 500 | 650 | 500 | 500 | **325** | **250** | |
| AISI 329 Coldworked | X3 Cr Ni Mo N 27-5-2 | 780 | 900 | 780 | 780 | **450** | **390** | |
| 17-4 PH, F 16 PH | X5 Cr Ni Cu Nb16.4 | 720 | 1000 | - | **No welding** | **500** | **-** | |
| DX45, Uranus[b] | X2 CrNi No N 22.5.3 | 450 | 660 | 450 | 450 | **330** | **225** | |
| Carbon steel | | | | | | | | |
| E24/A | - | 235 | 400 | 235 | 400 | **200** | **200** | $2.10*10^5$ |
| E32-AH 32 | - | 315 | 470 | 315 | 470 | **235** | **235** | |
| E36-AH 36 | - | 355 | 490 | 355 | 490 | **245** | **245** | |
| Copper alloys | | | | | | | | |
| Bronze-Mn | - | 245 | 510 | - | - | **245** | - | $1.10*10^5$ |
| Bronze-Ni-Al | - | 390 | 740 | - | - | **370** | - | |
| Monel 400 | - | 350 | 550 | - | - | **275** | - | $1.80*10^5$ |
| Monel 500 | - | 690 | 960 | - | - | **480** | - | |

a, Properties in unwelded condition $\sigma_D = \min(\sigma_y;0.5\sigma_u)$

b, To be welded in a shielding gas (argon)

### 20.5.3 Rudder dimensioning load

The rudder maximum hydrodynamic force F [N] shall be calculated with formula (20.2) for displacement craft, and (20.3) for planning craft, the larger of these values to be used.

$$F_1 = 1300 \cdot L_{WL} \cdot A \quad \text{[N]} \tag{20.2}$$

$$F_2 = 465 \cdot \left( \frac{h_r^{\,2}}{A} \right)^{0,43} \cdot V_{MAX}^{\,1,3} \cdot A \quad \text{[N]} \tag{20.3}$$

Where $A$ [m$^2$] is the rudder area, and $h_r$ [m] the rudder blade height.

### 20.5.4 Spade rudder bending moment and bearing loads

Table 20.2 Centre of pressure height parameter

| $c_2 / c_1 = \alpha$ | 1,00 | 0,90 | 0,80 | 0,70 | 0,60 | 0,50 | 0,40 | 0,30 | 0,20 |
|---|---|---|---|---|---|---|---|---|---|
| $k_b$ | 0,50 | 0,49 | 0,48 | 0,47 | 0,46 | 0,44 | 0,43 | 0,41 | 0,39 |

Where $c_2$ is the rudder blade upper edge chord, and $c_1$ the lower chord

The rudder bending arm $z_b$ [m] is

$$z_b = (k_b \cdot h_r) + h_b = h_c + h_b \quad \text{[m]} \tag{20.5}$$

Where $h_b$ is the distance from the top of the rudder blade to the centre of the neck bearing, and $k_b$ is the height parameter for the centre of pressure location along the rudder blade. The centre of pressure location $h_c$ may also be determined graphically.

Rudder bearing loads for spade rudders. $R_U$ is the carrier bearing load.

$$R_U = F \cdot \frac{z_b}{h_u} \quad \text{[N]} \tag{20.6}$$

Where

$h_u$ [m] is the distance between the carrier and neck bearing centres.
$R_H$ is the neck bearing load

$$R_H = R_U + F \quad \text{[N]} \tag{20.7}$$

Spade rudder bearing stocks shall be dimensioned using the equivalent (combined torque and bending) arm $z_{eq}$ at the centre of the neck bearing

$$z_{eq} = \sqrt{z_b^{\,2} + 0,75 \cdot r^2} \quad \text{[m]} \tag{20.8}$$

Where the torsion arm *r* [m] is calculated with the formula

$$r = 0{,}3 \cdot c - u \qquad r > 0{,}1c \quad \text{[m]} \tag{20.9}$$

where *u* [m] is the distance between the rudder stock centre and the rudder leading edge taken at the rudder centre of pressure height.

The dimensioning bending moment for a spade rudder at the centre of the neck bearing is calculated as follows

$$M_{eq} = z_{eq} \cdot F \quad \text{[Nm]} \tag{20.10}$$

### 20.5.5 Bending moment and bearing loads for rudders supported at their lower end

The bending moment at the neck bearing is:

$$M_H = F \cdot 0{,}25 \cdot z_b \text{ [Nm]} \tag{20.11}$$

where $z_b$ is the centre of pressure height according to Formula (20.5)

The bending moment in the sole piece:

$$M_s = 0{,}4 \cdot F \cdot L_S \text{ [Nm]} \tag{20.12}$$

Where $L_S$ [m] is the the distance from the sole piece forward end to the rudder stock.

The carrier bearing load:

$$R_U = \frac{M_H}{h_u} \text{ [N]} \tag{20.13}$$

The neck bearing load:

$$R_S = 0{,}35 \cdot F \text{ [N]} \tag{20.14}$$

The pintle bearing load:

$$R_H = F - R_S \text{ [N]} \tag{20.15}$$

The equivalent moment $M_{eq}$ [Nm] assumed to occur in the rudder stock:

$$M_{eq} = \sqrt{M_H{}^2 + 0{,}75T^2} \text{ [Nm]} \tag{20.16}$$

Where $M_H$ is the moment in (20.11) and $T = F \cdot r$ [Nm]

### 20.5.6 Rudder stock diameter

The diameter d [mm] of a round solid stock to be at least

$$d = 22 \cdot \left( \frac{M_{eq}}{\sigma_D} \right)^{\frac{1}{3}} \quad \text{[mm]} \qquad (20.17)$$

Where $\sigma_D$ is the rudder stock design stress according to Table 20.1.

This requirement refers to the position where the equivalent moment reaches its maximum. Stocks other than round and solid shall be assessed based on their section modulus. Rudders supported in other ways than shown here above shall be assessed according to ISO 12215-8 except for that the formulas for forces $F_1$ (20.2), $F_2$ (20.3), and rudder stock diameter $d$ (20.17) given above shall apply.

### 20.5.7 Rudder bearings

The rudder bearings and their support arrangements shall be designed for the rudder stock loads at the position in question. The bearing pressure is calculated for the projected area using the actual bearing length.

Table 20.3: Allowed bearing pressures

| Material combination | Allowed pressure, $\sigma_D$ [N/mm$^2$] |
|---|---|
| Steel against stainless or bronze | 7.0 |
| Steel against white metal, oil lubricated | 4.5 |
| Steel against plastic, water lubricated | 5.5 |

### 20.5.8 Rudder blade

The rudder blade shall stand the dynamic pressure from the water flow rate in the propeller slipstream. The construction shall ensure that the skins do not separate from internal pressure.

The bending and torque moments shall be effectively transmitted to the rudder stock using stiffeners or bracing.

For spade rudders the thickness of the blade at half height hr/2 shall be at least 70 % of the thickness at the top. This requirement may be linearly interpolated from top to bottom.

### 20.5.9 Plate and profiled rudders

Plate rudders shall have a thickness $t_e$ [mm] at least according to Formula (20.18), and the skin thickness for profiled rudders $t_d$ [mm] at least according to Formula (20.19).

$$t_e = 3 + 0{,}125 \cdot d \quad \text{[mm]} \qquad (20.18)$$

$$t_d = k \cdot t_e \quad \text{[mm]} \qquad (20.19)$$

Where

$d$ [mm] is the required rudder stock diameter

$k$ = 0.46 for carbon steel and aluminium, and

$k$ = 0.33 for stainless steel (AISI 316).

Rudders with skins of FRP shall have at least the same skin thickness as carbon steel or aluminium.

### 20.5.10 Tillers and quadrants

The rudder torque shall be transmitted to the tiller or quadrant through a keyway connection or equal. The intact diameter of the connection with the given torque $T_r$ [Nm] shall be at least:

$$d_{top} = 1{,}72 \cdot \left( \frac{1750 \cdot T_r}{\sigma_D} \right)^{\frac{1}{3}}, > 0{,}6\, d \quad \text{[mm]} \qquad (20.20)$$

Where $T_r = F \cdot r$ [Nm].

The diameter of the machined stock shall meet the requirement in Formula (20.20) with the diameter taken as the smallest intact diameter to the bottom of the keyway, or as shown in Figure 20.3.

At the carrier bearing the intact diameter of the stock shall be at least 60% of the maximum diameter requirement for the stock, and the diameter requirement increases linearly towards the largest diameter.

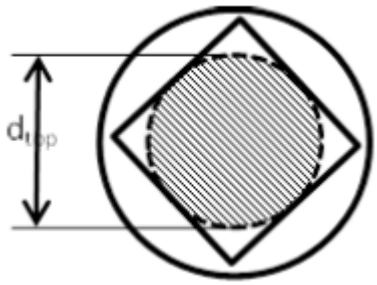


Figure 20.3: Interpretation of the intact diameter for a machined stock

### 20.5.11 Upper end of rudder stock casing

For preventing entrance of water there shall be a watertight seal or an equal arrangement in the casing.

### 20.5.12 Rudder sole piece

For rudders supported at their lower end the section modulus $SM_S$ at the forward end of the sole piece where it attaches to the hull shall be at least:

$$SM_s = \frac{1{,}5 M_S}{\sigma_D} \qquad [\text{cm}^3] \qquad (20.21)$$

Where σD [MPa] for metals is given in Table 20.1 and for FRP min(0.5σut, 0.5σuc).

The section modulus for the sole piece at the rudder stock shall be at least 60% of the value specified by Formula (20.21)

Between the sole piece attachment forward, and the rudder stock position the sole piece section modulus may be linearly interpolated.

### 20.5.13 Rudder stock flange bolted connections

For a rudder stock bolted connection the minimum allowed effective bolt circle diameter shall be determined with this formula:

$$d_B = \sqrt{\frac{11 \cdot q \cdot M_{eq}}{(n-1) \cdot (0{,}64 \cdot q)^2}} \qquad [\text{mm}] \qquad (20.22)$$

Where $M_{eq}$ is the equivalent moment according to Formula (20.10) for spade rudders, or Formula (20.16) for rudders supported at their lower end, n is the number of bolts, and q the bolt circle width [mm] according to Figure 20.4.

The bolt circle width q shall be at least two times the rudder stock thickness.

The bolts used shall have a minimum breaking strength of 790 Mpa.

The rudder stock flange with connections and welds shall be dimensioned for an equivalent moment Meq using the material properties given in Table 20.1.

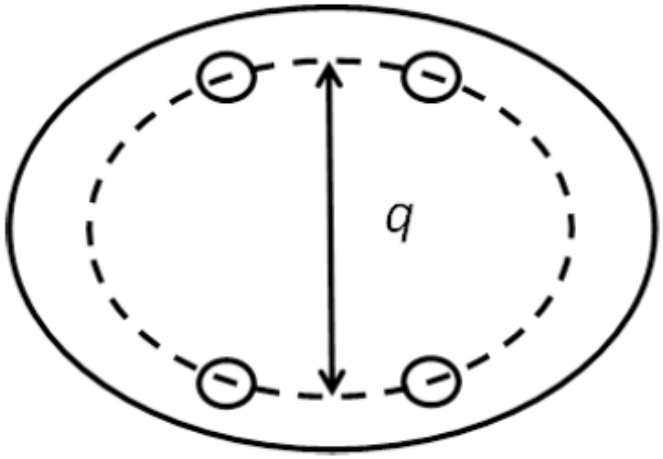


Figure 20.4: Bolt circle width q [mm]

### 20.5.14 Steering system forces

The steering force $K_{RD}$ for craft with rudders shall be determined with the formula:

$$K_{RD} = 1{,}1 \cdot F \cdot \frac{r}{l_T} \qquad \text{[N]} \qquad (20.23)$$

Where $r$ is the centre of pressure distance from the rudder stock center, and $l_t$ the tiller length [m].

Steering arrangements for steerable propulsion devices shall meet the specifications from both the steering system and propulsion device manufacturers.

# 21 PROPULSION MACHINERY

## 21.1 Objective

The objective of the rules in this chapter is to ensure that the machinery installations are made so that the risks of fire and personal injury caused by rotating or hot parts, and unintentional engine stopping are minimized.

## 21.2 References

In this chapter reference is made to the following documents:

- ISO 8665:2006 Small craft – Marine propulsion reciprocating internal combustion engines – Power measurements
- ISO 9094-1:2002 Small craft – Fire protection: Part 1 (Craft with hull length up to and including 15 m)
- ISO 9094-1:2002 Small craft – Fire protection: Part 2 (Craft with hull length over 15 m)
- ISO 13591:1997 Small craft –Portable fuel systems for outboard motors
- ISO 10088:2013 Small craft – Permanently installed fuel systems and fixed fuel tanks
- ISO 11105:1997 Small craft – Ventilation of petrol engine and/or petrol tank compartments
- ISO 7840
- IEC 60092-507 Electrical installations in ships part 507 Small vessels

## 21.3 Documentation

For assessment of the requirements given in this chapter the following documentation is required:

- propulsion engine manufacturer, type, and power rating;
- propulsion devices manufacturer and type;
- engine space arrangement drawing, showing
- location of machinery;
- doors and hatches;
- ventilation duct locations and cross sections;
- cooling system arrangement
- exhaust system arrangement; and
- pressure vessel information, if any

## 21.4 Application

These rules apply only for unmanned engine spaces.

## 21.5 Engines

### 21.5.1 Propulsion engine types

Inboard engines shall be designed and approved for marine use, and be diesel engines or electrical motors.

For outboard engines petrol may be used as fuel.

Outboard engines are approved with the following limitations:

- In Design Category C and D single or multiple outboard engines may be installed;
- If outboard engines are used in Design Category A at least twin installation is required;

Electrical propulsion systems shall meet the requirements in IEC 60092-507.

Permanently installed auxiliaries, for example for generating electrical power, shall have diesel engines designed for marine use.

### 21.5.2 Portable auxiliaries

Portable auxiliaries like petrol driven generators, pumps, and hydraulic power units are allowed provided they are used solely on open decks, and are stored in compartments meeting the requirements for petrol storage given in standard ISO 10088.

A portable petrol tank shall have a maximum of 27 liters volume, and meet the requirements in standard ISO 13591.

For small portable petrol engines (<10 kW) where the portable tank volume (27 liters) is not exceeded, the tank may alternatively be integrated into the power unit provided there are safety instructions for the safe procedures to be followed when fuel is filled.

### 21.5.3 Power ratings

The power for combustion engines shall be declared according to standard ISO 8665.

### 21.5.4 Redundancy

It shall be possible to maintain the normal use of the propulsion machinery, or restore it to normal also when one essential auxiliary system falls out. Depending on Design Category and engine installation the following essential auxiliary systems shall have a backup:

- fuel feed system (see Chapter 22);
- seawater cooling system (see item 21.8); and
- electrical supply (batteries or generator) (see Chapter 24).

### 21.5.5 Rolling and pitching

The main propulsion engines as well as all auxiliaries which are important for the safety of the craft shall as installed on board work at heeling angles between 0...15 degrees each way in statical conditions, and between 0...22.5 degrees in dynamic heeling conditions (rolling) with 7.5 degrees of dynamic trim changes each way (pitching) at the same time.

### 21.5.6 Hot surfaces

Any surface with temperatures exceeding 220°C shall not be located directly below components containing fuel. If necessary, the fuel from joints prone to leaking shall be prevented from reaching hot surfaces by the use All surfaces with temperatures exceeding 60°C which can be touched by the crew without the use of tools shall be insulated.

## 21.6 Power transmission

Engine beds, propeller shafting, flange couplings and other parts of the transmission shall meet the requirements in Chapter 23.

## 21.7 Engine spaces

### 21.7.1 Arrangements

Engine spaces shall be separated from the interior of the craft.

All engine parts shall be accessible (definition see Chapter 32) for service and repair. This may be arranged by providing enough space around the engine(s), enabling service and repair in situ. In order to achieve accessibility the removal of non-structural bulkheads and equal is allowed. Alternatively, it should be possible to lift out the engine for bigger overhauls. Accessibility is required for routine service.

There must not be any windows in the engine space. Electrical lighting is compulsory.

### 21.7.2 Installation of outboard engines

For outboard engines with maximum power 15 kW, attached without through bolting, there shall be a transom protection. The protection shall have a ridge at least 5 mm high preventing the engine from sliding off the transom in case its attachments loosen.

Outboard engines with over 15 kW power shall be through bolted to the transom.

In craft with over 15 kW outboard engine(s) there shall be a splash well forward of the engine(s). The well shall have a drain opening. Alternatively, fully enclosed craft, or those having buoyancy for flotation, may have arrangements where the water is immediately drained overboard. Steering cables and fuel hoses penetrations in the well shall meet the requirements in Chapter 3.

The installation of steering systems shall meet the requirements in Chapter 20.

## 21.8 Cooling systems

### 21.8.1 General

The rules in this section apply to cooling systems where the cooling is achieved by circulating sea water from a through hull connection through the engine cylinder block, or a heat exchanger, and also to systems where the cooling water is circulated through bottom tanks cooled by the passing sea water (skin tank cooling).

### 21.8.2 Cooling systems with sea water intake

In Design Category A and B two separate sea water intakes and suction pipes are required. Alternatively, an intake connected to a sea chest having a protective grating may be accepted.

For craft with more than one propulsion engine, one sea water intake per engine is sufficient.

For Design Category C and D craft a single intake and suction pipe is sufficient.

Each intake shall have a strainer, and additionally a filter in the suction pipe. The filter shall be serviceable without the use of tools.

Sea water filters and other cooling system components shall stand at least 100°C working temperature, as well as short fires in the engine space.

Sea water filters and other cooling system components shall stand at least 100°C working temperature, as well as fire of short duration in the engine space.

Sea water shall be prevented from back flowing into the engine cylinders by a siphon breaking arrangement at the highest point of the cooling water circuit, and if required with a water lock in the exhaust line when the exhaust bend is close to the water surface according to item 21.9.2.

Sea water cooling circuits shall be equipped with alarm for lack of water.

The through-hulls shall conform with Chapter 3.

Cooling systems without sea water intakes

When the cooling is based on heat exchanging through the bottom of the craft, the exchanger lowest point shall not be below the keel, and the forward part have collision protection.

Skin tank cooling and external heat exchanger sizing and scantlings shall conform with the engine manufacturer’s recommendations.

Skin tank cooling integrated into the hull, and external heat exchangers shall pass a pressure test to 40 kPa for three minutes without any pressure drop.

### 21.8.3 Cooling system details

The materials used in sea water systems shall be corrosion resistant. Parts shall not be combined so this causes galvanic corrosion.

Cooling circuits shall normally consist of metal tubing. Where flexibility is required short hoses may be used.

Hoses used in cooling system shall stand the expected temperatures (for example meet the requirements in standard ISO 7840).

Hose clamps shall be of stainless steel (AISI 316) or equivalent material.

In cooling system hose connections two stainless clamps shall be used, or alternatively at least one heavy duty super-clamp with two bolts, and over 15 mm width.

## 21.9 Exhaust system

### 21.9.1 General

Each engine shall have a separate exhaust system.

The exhaust system exits and ventilation system intakes shall be located so that exhaust gases are not conveyed into the craft interior.

Exhaust system parts cooled by seawater shall be of corrosion resistant materials. Parts shall not be combined so this causes galvanic corrosion.

The exhaust system back pressure shall not exceed the engine manufacturer’s limits.

For dry exhaust systems attention should be paid to high temperature, gas tightness, heat expansion, engine vibrations, and necessary heat insulation.

### 21.9.2 Prevention of water intrusion

The exhaust should be laid out so water intrusion into the engine or craft through siphoning or water pressure is avoided.

The entire exhaust outlet including its connection to the exhaust hose shall be at least 100 mm above the fully loaded waterline, or alternatively;

If the exhaust outlet is less than 100 mm above the fully loaded waterline, the strength of the outlet pipe shall be equal to that required for the hull in the same location, and the connection to the exhaust hose shall be at least 100 mm above the fully loaded waterline.

In watercooled exhaust systems without a water lock or siphon breaker, the overflow edge of the engine exhaust bend shall be at least 350 mm above the fully loaded waterline, and the exhaust line shall be downward-sloping all the way to the outlet located above the fully loaded waterline

If the engine exhaust bend overflow edge is less than 350 mm above the fully loaded waterline, a siphon breaker shall be installed in the cooling water line, additionally the uppermost point of the exhaust line shall be at least 350 mm above the fully loaded waterline, and the exhaust be downward-sloping from this point to the outlet in all loading conditions.

The siphon breaker shall be higher up than the exhaust line, and at least 350 mm above the fully loaded waterline.

The volume of the exhaust line between the engine exhaust bend and the uppermost overflow point of the exhaust line shall be sufficient, and if necessary increased with a water lock, for avoiding water intrusion into the engine.

For engines with integrated exhaust the engine manufacturer's advice should be followed for the height of the engine exhaust bend above the fully loaded waterline, considering all loading conditions.

### 21.9.3 Insulation

For dry exhaust systems all parts exceeding 60°C shall be thermally insulated for reasons of engine space temperature and crew safety.

Exhaust lines passing through bulkheads and the hull shall be thermally insulated from these items.

### 21.9.4 Engine space ventilation

The air supply for combustion and engine space cooling shall be sufficient in relation to the power of the engine(s). With the engines running the engine space temperature measured at the level of the engine air intake shall not be more than 15°C over the ambient temperature.

This requirement is considered fulfilled if the engine space natural ventilation is arranged as follows:

- in the engine space bottom third, above bilge water level, there shall be duct(s) for the outgoing air;
- in the engine space top third there shall be duct(s) for the incoming air on the opposite side of the engine space; and
- the total cross section of the ducts shall be at least $7 \cdot P$ [$cm^2$] where P [kW] is the total engine power.

Alternatively the ventilation may be based on the engine manufacturer's recommendations, provided the engine space temperature requirement above is fulfilled.

Engine space ventilation ducting shall also meet the requirements in standard ISO 11105, meaning that the ventilation of the space shall work also when the engines and forced ventilation are shut off.

For preventing water intrusion into the engine space, the location of the ventilation openings shall meet the requirements in Chapter 3.

The ventilation openings shall be located for avoiding flying spray in waves from getting into the engine combustion air.

In case there is a fire extinguishing system in the engine space (see Chapter 27) requiring the ventilation to be disabled for proper functioning, the ventilation ducting shall be fitted with closing arrangements having controls outside the engine space, enabling locking in both Closed and Open position.

### 21.9.5 Material requirements for the exhaust system

Water cooled exhaust hoses shall meet the requirements in SAE J2006, or have Classification Society approval for use in marine exhaust systems. The allowed working temperature for components should be at least 80°C, and at least 100°C within half a meter from the engine exhaust bend.

Dry exhausts shall be of steel or equivalent material, and have insulation according to Clause 21.9.3.

## 21.10 Control and information systems

Propulsion machinery shall be controllable from the steering station. The following information shall be displayed at this station if applicable:

- propulsion engine rpm;
- propulsion engine lubricating oil pressure;
- reduction gear oil pressure (over 15 m length);
- cooling water temperature; and
- alarm for lack of water in wet exhaust systems.

## 21.11 Pressure equipment

Pressure equipment shall be assembled, located, maintained, used, and inspected so it does not present a hazard to health, safety, or property. Conformity assessment according to the applicable Law for pressure equipment is verified with Notified Body inspections or other procedures specified in National Regulations and Trade and Industry Ministry decisions for pressure equipment safety.

### 21.11.1 Tanks

### 21.11.2 Strength

Fuel tanks shall meet the requirements in Chapter 22. Other tanks, such as for lubricating- or hydraulic oil, or cooling water tanks shall be pressure tested to a level ensuring sufficient safety in relation to the working pressure in the tank, including the static head in an overflow condition. The test pressure PTEST is determined with Formula (21.1)

$P_{TEST} = 15 \cdot h$ [kPa]; min 20 kPa (21.1)

where h [m] is the vertical distance from the bottom of the tank to the top of the filler or vent line.

### 21.11.3 Tank materials

Tank materials shall be suitable for the intended use. For fuel tanks the requirements in Chapter 22 shall be met.

# 22 FUEL SYSTEM

## 22.1 Purpose

The purpose of the rules in this chapter is to ensure a undisturbed fuel supply, to minimize risk of fire, and to define the means for the prevention of pollution.

NOTE! In Chapters 34...39 there may be further requirements related to additional notations.

## 22.2 References

In this chapter reference is made to the following documents:

- ISO 10088:2013 Small craft – Permanently installed fuel tanks
- ISO 11105:1997 Small craft – Ventilation of petrol engine and/or petrol tank compartments
- ISO 28846:1993 Small craft – Electrical devices – Protection against ignition of surrounding flammable gases
- ISO 7840:2013 Small craft – Fire resistant fuel hoses
- ISO 10133:2012 Small craft – Electrical systems – Extra-low voltage d.c. installation
- ISO 13297:2012 Small craft - Electrical systems – Alternating current installations
- ISO 21487:2012+A2:2015 Small craft – Permanently installed petrol and diesel fuel tanks
- ISO 5817:2014 Welding. Fusion-welded joints in steel, nickel, titanium and their alloys (beam welding excluded). Quality levels for imperfections
- ISO 10042:2006 Welding. Arc-welded joints in aluminium and its alloys. Quality levels for imperfections

## 22.3 Documentation

For assessment of the requirements given in this chapter the following documentation is required:

- fuel system showing
    - location of components
    - information about components
- drawings of fuel tanks showing
    - shape
    - construction
    - scantlings
- test protocols (for example leak testing, pressure testing).

## 22.4 Design of fuel systems

The fuel system shall be designed and built so a undisturbed fuel supply is ensured to the propulsion engine(s) and other critical machinery considering the Design Category of the craft.

In Design Category C and D there may be one fuel tank with separate feed and return lines, fuel filter, and water separator. In Design Category A and B one of the following arrangements is required:

- one tank with one feed line equipped with dual filters and by-pass
- one tank with two feed lines (twin engine installation); or
- two tanks

The valves controlling the switching from one feed line to the other shall be easily accessible (see Chapter 31).

Portable fuel tanks (see Chapter 21) are allowed in the following case:

- Small auxiliaries
- Supply for one outboard motor.

Petrol fuel tanks shall not be integrated into the hull structure.

## 22.5 Requirements for spaces containing fuel tanks

Spaces containing fuel tanks shall be separated from enclosed interior spaces (see detailed information in EN ISO 11105 clause 4.4).

Spaces containing petrol tanks shall have natural ventilation. Spaces containing diesel oil tanks shall have natural ventilation in craft over 15 m length. The ventilation ducts shall lead to the open air. The duct for the outgoing air shall be located in the bottom third of the space. The ducts for the incoming and outgoing air shall be located on opposite sides of the space, at least 600 mm apart when feasible.

The total cross section of the incoming air duct(s), and the total cross section of the outgoing air duct(s) shall be according to Formula (22.1)

$$A \geq 33 \cdot \ln \left[ V/0{,}14 \right] \quad [cm^2] \qquad (22.1)$$

where V [$m^3$] is the net volume of the space.

In spaces containing petrol tanks only electrical components essential for bilge pumping and fuel system shall be installed. All the installed electrical components shall be of the ignition protected type according to standard ISO 28846.

## 22.6 Fuel tanks

### 22.6.1 Fuel tank arrangements

In diesel oil tanks the connections may be located on the sides provided they have shut-off valves directly at the tank. The shut-off valves shall be protected if there is a risk of structural damage to them.

In petrol tanks all the connections shall be on the top, except for metallic feed or return pipes, which may be attached at the top edge of tank sides or ends, provided they are welded to the tank, and extend upwards above the tank top.

The fuel return pipe shall terminate close to the tank bottom.

If there is a drain in a diesel oil tank, it shall be fitted with a shut-off valve having a plug that can be removed only with tools.

Each tank shall have an inspection hatch with at least 150 mm diameter. The inspection hatch shall, as a rule, be located on top of the tank, but for diesel oil tanks it may also be on the tank side. There shall be access to the inspection hatch when the tank is in position.

It shall be possible to determine the fuel level and the amount of fuel in each tank.

Transparent external tank level sightglasses are allowed only in diesel oil tanks. They shall be permanently installed, protected against structural damage, and have self-closing shut-off valves which can be opened only manually. Sight glasses connected to the top of a tank, or at the upper edge of tank sides do not need a shut-off valve at that end.

Metal tanks shall be designed and installed so their external surfaces do not trap water.

All fittings on as well as inside the tanks shall be designed and installed so they can not cause damage to the tanks as a result of movement or vibration.

Inside tanks there shall not be any filters.

Prefabricated fuel tanks shall be CE-marked according to standard ISO 21487:2012+A2:2015.

Electrical components in fuel systems shall be installed according to standard ISO 10088, ISO 10133 and ISO 13297.

Integral fuel tanks are allowed only for fuels with a flashpoint over 60°C (for example diesel oil).

### 22.6.2 Materials

The following requirements refer for tanks made of steel, stainless steel, aluminium, FRP, and polyethylene. Tanks made of other materials are assessed based on the material compatibility with the fuel in question, as well as the diffusion properties, corrosion resistance, strength and stiffness, and other relevant properties. FRP tanks shall be made with Class A resins according to standard ISO EN 12215-1, or with other fuel resistant resins.

Diesel fuel tanks located in the engine space shall be of metal.

The welds in metallic fuel tanks shall meet the requirements in standard ISO 12215-6 for the weld details.

### 22.6.3 Fuel tank construction

CE-marked tanks with a volume less than 200 litres are considered to meet these requirements.

Tanks without CE-marking shall meet the requirents in Table 22.1.

Fuel tanks shall be designed to stand the highest pressure the tank will encounter, considering also dynamic forces.

Tanks with maximum 500 liters volume and meeting the minimum thickness and number of baffles requirements in Table 22.1, are considered to meet the strength requirements.

Tanks with over 500 liters volume shall additionally be assessed using standard ISO 12215-5.

Integral tanks shall additionally be dimensioned and built according to Chapters 7…19 to stand the hull loads.

Table 22.1: Minimum thickness [mm] and Number of baffles, V = volume [liters]

| **Volume, V [l]** | **<50** | **50…150** | **150…300** | **300…500** | **>500** |
|---|---|---|---|---|---|
| Number of baffles | 0 | 1 | 2 | 3 | V/150 |

| **Material** | **Material thickness [mm]** | | | | | **Fuel** |
|---|---|---|---|---|---|---|
| Aluminium | 2,0 | 3,0 | 4,0 | 5,0 | 6,0 | Diesel, Petrol |
| Stainless steel (AISI 316) | 1,25 | 1,5 | 2,0 | 3,0 | 3,0 | Diesel, Petrol |
| Steel | 2,0 | 2,0 | 3,0 | 4,0 | 5,0 | Diesel |
| Hot-dipped galvanized steel (from outside only) | 1,5 | 1,5 | 2,5 | 3,5 | 4,0 | Diesel |
| Hot-dipped galvanized steel (from both sides) | 1,5 | 1,5 | 2,5 | 3,5 | 4,0 | Petrol |
| FRP | 4,0 | 4,5 | 5,0 | 5,5 | 6,0 | Diesel |
| Polyethylene | 4,0 | 6,0 | 8,0 | 10 | 15 | Diesel, Petrol |

Openings in baffles shall be maximum 30% of the tank cross section at the baffle. Baffles shall not prevent fuel flow along the bottom of the tank, nor air flow along the inside of the tank top.

### 22.6.4 Tank seatings and attachments

The tank seatings and attachments shall stand the loads that occur in the relevant Design Category conditions. The tank attachment shall pay attention to chafe protection. The attachment shall stand the mass forces caused by the downward accelerations used in the hull design pressure determination (see Chapter 7). In other directions the accelerations shall be assumed to be at least 2 g.

Tanks not integrated in the structure shall be installed so there is ventilation around them. Metal tanks shall be at least 25 mm above the bilge pump suction head, or float switch.

Tanks may be foamed in with polymer foam on the following conditions:

- the foam can stand the fuel in question, and the temperature range -40…+60°C;
- metal tanks shall not be foamed in;
- the foam shall not extend to the hull bottom;
- the supporting area is sufficient for carrying the previously mentioned loads.

### 22.6.5 Testing of fuel tanks

In case the tank has CE-marking, only a system tightness test according to 22.9 “Testing” is made.

The tank shall have all connections installed during the test.

#### *22.6.5.1 Diesel oil tanks*

For metal tanks the test pressure is the larger of: 20 kPa, or 1.5 times the maximum possible static head (the vertical distance from the top of the tank to the top of the filler or vent line).

Testing time is 5 minutes. The pressure shall not increase or decrease during the testing. The tank must not leak.

Polyethylene tanks shall use the same test pressures as for metal diesel oil tanks. The testing time is 1 hour when the material density is ≥ 935 kg/m3 and 5 hours when the density is less than 935 kg/m3.

Non-metallic tanks in engine spaces shall meet the fire testing requirements in ISO 21487.

#### *22.6.5.2 Petrol tanks*

Petrol tanks shall be pressure-impulse tested according to ISO 21487. Metallic petrol tanks may alternatively be pressure tested. The test pressure shall be the higher of 30 kPa, or 1.5 times the maximum possible static head + 10 kPa.

The tank shall not break or leak during the test, but permanent deformation is allowed. In addition to the requirements in this chapter the tank scantlings shall meet the ISO 12215-5 integral tank requirements, 12215-6 structural detail requirements, and welding quality class B requirements in ISO 5817 (steel) or ISO 10042 (aluminium).

Non-metallic petrol tanks shall meet the fire testing requirements in ISO 21487.

### 22.6.6 Marking of fuel tanks

Tanks shall be marked with the net volume [liters] and the fuel to be used.

For craft having additional CE-marking according to the RCD the tanks shall be marked as follows:

Tanks to be permanently marked with at least 3 mm high letters and numbers:

- Tank manufacturer, place and country
- Year made (last two numbers)
- Tank volume [liters]
- For non-metallic tanks the maximum allowed temperature [°C]
- Symbol for the appropriate fuel(s) (per ISO 11192) or the words “Petrol” or “Diesel”.
- Maximum hydrostatic head above the tank [m]
- Maximum allowed test pressure [kPa]
- For fire-tested non-metallic tanks additionally “ISO 21487”

The markings shall be legible when the tank has been installed.

## 22.7 Fuel system installation

All fuel system parts shall be separately supported, except for small couplings and fittings, as well as short hoses.

All valves and other fittings used or monitored during normal use or in an emergency shall be easily accessible (see Chapter 32). All the other components shall be accessible.

In case there are copper alloy fittings with an aluminium tank, the fittings shall be electrically insulated from the tank for corrosion prevention.

All metallic parts of the fuel system between the filler cap and engine shall be grounded. The grounding cable must not be attached to a spud by jamming it under the hose clamp. If the grounding cable is insulated, the colour shall be yellow-green.

## 22.8 Fuel system piping

The filler cap inside diameter to be at least 31.5 mm, and the filler hose at least 38 mm. A separate filler line is required for each tank.

The vent line cross section shall be at least 95 mm2 and the inside diameter 16 mm. A separate vent line is required for each tank.

The fuel filler and vent lines shall be installed so they drain downwards to the tank.

The fuel filler cap shall be located so overflowing fuel cannot reach the craft interior.

The fuel filler cap and vent line exit shall be at least 400 mm from any ventilation opening or air intake.

The vent line exit or vent line gooseneck shall be installed sufficiently high up, so overflow is avoided during filling, and water can nor enter during normal use. The vent line exit and gooseneck shall be located higher up than the filler cap.

Fuel pipelines shall normally be of steel or copper. Aluminium piping is allowed for diesel oil. Rigid pipes shall be connected to the engine with short flexible fuel hoses.

Fuel hoses shall be accessible for inspection and maintenance.

Fuel hoses in the engine space shall be fire resistant, type A1 or A2 according to standard ISO 7860.

Outside of the engine space hoses of type B1 or B2 may be used.

Fuel feed and return pipes shall have shut-off valves as close to the tank as possible. The valves shall have remote control from an easily accessible location outside the engine space. The valves shall be metallic or fire resistant according to ISO 7840. If feed and return lines are installed so fuel siphoning cannot occur, the shut-off valves are not required.

The fuel feed system shall have a fuel filter, and a water separator. Water collected in the separator shall be recognized visually, or by a sensor with alarm. In outboard installations filtering and water separation may be combined into one unit, then it is not necessary to have visual indication for any water.

For craft in Design Category A and B it shall be possible to clean or replace the filter with the engine running. In the filter pipeline there shall be a vacuum sensor, with indication when cleaning of the filter is due.

he fuel hoses shall be connected to the pipes, spuds or fittings with metallic hose clamps, or swaged end fittings. Hoses with over 25 mm outer diameter shall use two hose clamps for the connections, and the spuds shall be at least 35 mm long to accommodate twin clips.

## 22.9 Testing

### 22.9.1 Pressure testing of the system

After installation the fuel system shall be tested for leaks according to standard ISO 10088 Annex A.

In Design Category C and D this testing may alternatively be made in connection with sea trials.

Using pressure testing the installed system shall be controlled as follows:

- Test pressure 20 kPa
- Testing time 1.5 s times tank volume in liters, min. 5 min, and max. 30 min.
- During the test no leaking in the system is allowed, possible pressure drop to be monitored.
- Filler cap and vent line exits may be plugged.
- The fuel pump at the engine to be disconnected from the feed line, and closed. Other valves and anti-siphon valve to be open during the test.

### 22.9.2 Fire testing

The fuel system components located in the engine space (for example fuel filters, water separators) shall have been fire tested according to ISO 7840. Non-metallic fuel tanks in the engine space shall have been tested according to ISO 21487. When the fuel pipelines are of metal, their attachments and brackets do not need fire testing.

# 23 POWER TRANSMISSION

## 23.1 Objective

The purpose of the rules in this chapter is to ensure correct sizing of the parts of the power transmission in question which do not belong to assemblies for which the equipment supplier takes responsibility, and make sure that the power transmission does not impair the watertightness of the hull.

## 23.2 References

In this chapter reference is made to the standard ISO 8665 Small Craft – Marine propulsion reciprocating internal combustion engines – Power measurements

## 23.3 Documentation

For assessment of the requirements given in this chapter the following documentation is required:

- drawing of the propeller shaft line, with the following shown
- propeller shaft including bearings and shaft seal;
- constant velocity joints and other components; and
- material information; and
- propeller shaft sizing calculation

## 23.4 General requirements

These rules are primarily intended for cases where the power transmission is not supplied as a complete assembly, instead the components are manufactured and chosen one by one by the manufacturer. This rule version deals with propellers on straight shafts as well as waterjet units.

The rules do not specify requirements for propulsion units delivered as assemblies, such as stern drives, water jets, and surface propeller drives. For the installation and use of such units the manufacturer's instructions should be followed. In case such units despite this cause unexpected danger, additional requirements can be given according to the principles presented under clause 23.1 "Objective".

For craft with the additional notation Ice Reinforcement the power transmission shall be assessed according to the additional requirements in Chapter 38.

## 23.5 Engine bearers

Engine bearers shall be designed so they can stand the forces in the relevant Design Category arising from engine weight, accelerations, propulsion torque, and possibly thrust.

This requirement is considered fulfilled if the bearers are designed according to Chapters 10, 14 and 18, depending on the material used.

## 23.6 Gearboxes

The gearbox shall be compatible with the propulsion engine

## 23.7 Requirements for shafting with propeller

### 23.7.1 Propeller shaft

The diameter of the propeller shaft d [mm] shall meet the engine manufacturer's recommendations, but shall as a minimum meet Formula (23.1)

$$d = 420 \cdot \left( \frac{P}{r \cdot \tau_d} \right)^{\frac{1}{3}} \text{[mm]} \qquad (23.1)$$

where P [kW] is the engine maximum continuous output according to standard ISO 8665, r [1/min] the propeller rpm, and τd [N/mm$^2$] the allowed shear strength given in Table 23.2.

Table 23.2 Propeller shaft and strut material data

| Material | Chemical composition | $\sigma_y{}^a$ [MPa] | $\sigma_u{}^a$ [MPa] | $\sigma_D{}^a$ [MPa] | $\tau_D$ [MPa] |
|---|---|---|---|---|---|
| AISI 304 | X5 Cr Ni 18.9 | 195 | 500 | 195 | **111** |
| AISI 316, 316L | X5 Cr Ni Mo 17.2.2 | 195 | 500 | 195 | **111** |
| AISI 329 Not cold worked | X3 Cr Ni Mo N 27-5-2 | 500 | 650 | 325 | **185** |
| AISI 329 Cold worked | X3 Cr Ni Mo N 27-5-2 | 780 | 900 | 450 | **256** |
| 17-4 PH, F 16 PH | X5 Cr Ni Cu Nb 16.4 | 720 | 1000 | 500 | **285** |
| DX45, Uranus[b] | X2 Cr Ni No N 22.5.3 | 450 | 660 | 330 | **188** |
| E24/A | - | 235 | 400 | 200 | **114** |
| E32-AH 32 | - | 315 | 470 | 235 | **133** |
| E36-AH 36 | - | 355 | 490 | 245 | **139** |
| Bronze-Mn | - | 245 | 510 | 245 | **139** |
| Bronze-Ni-Al | - | 390 | 740 | 370 | **210** |
| Monel 400 | - | 350 | 550 | 275 | **156** |
| Monel 500 | - | 690 | 960 | 480 | **273** |
| $\tau_D = 0{,}57\ \sigma_D{}^a$, where $\sigma_D{}^a = min(\sigma_y;\ 0{,}5\sigma_u)$ | | | | | |

### 23.7.2 Flexible shaft couplings and constant velocity joints

Flexible shaft couplings equalizing torque and bending or constant velocity joints shall be suitable for the occurring torque and bending according to the manufacturer's recommendations.

### 23.7.3 Thrust bearings including bearers

Thrust bearings shall be chosen according to the manufacturer's recommendations. Their bearers shall be dimensioned with consideration for maximum propeller thrust, and other loads for example in ice.

### 23.7.4 Propeller shaft seals

All materials used in shaft seals shall be oil resistant. The entire seal shall stand heating up without leaking significantly.

Propeller shaft penetrations through watertight bulkheads shall be dimensioned so the bulkhead strength, tightness, and possible fire class are not impaired.

### 23.7.5 Propeller shaft struts

Single arm propeller shaft struts shall be dimensioned so that the section modulus W [cm3] at the hull is at least:

$$W = \frac{l * d^2}{112 \cdot \sigma_u} \text{ [cm}^3\text{]} \qquad (23.2)$$

Where:

- l [mm] is the strut length from the hull to the centre of the shaft
- d [mm] is the shaft diameter
- σu [Mpa] the material breaking strength according to Table 23.3.

Where the strut joins the shaft bearing the section modulus W [cm3] shall be at least 60 % of the above. W at intermediate positions along the strut can be linearly interpolated between these two values.

For double arm struts the section modulus for each shall be 50 % of the requirement in (23.2), when the distance l is measured along the perpendicular from the shaft center to the hull, and the angle between the arms is less than 70 degrees.

### 23.7.6 Propeller shaft bearings

The following requirements are valid for bearings of white metal or equal materials.

The bearing outer diameter shall be at least according to Formula (23.3).

$$t = \frac{d+230}{32} \text{ [mm]} \qquad (23.3)$$

Where d [mm] is the actual shaft diameter.

The length of a bearing inside the stern tube shall be at least three times the shaft diameter, and at least two times the shaft diameter in other locations.

### 23.7.7 Bearing spacing

The maximum distance between bearing centres S [m] shall be taken according to Formula (23.4) for shafts of steel.

$$S = 85 * \sqrt{\frac{d}{85{,}4 * r}} \quad \text{[m]} \qquad (23.4)$$

Where

- d [mm] is the shaft diameter
- r [1/min] is shaft rpm.

When a flexible coupling is used at the gearbox flange the minimum bearing spacing should be according to Table 23.3, but not more than given by Formula (23.4).

Table 23.3: Minimum bearing distance with flexible coupling.

| Shaft diameter [mm] | Minimum allowed bearing distance [mm] |
|---|---|
| 25 | 300 |
| 30 | 400 |
| 35 | 500 |
| 40 | 600 |
| 45 | 700 |
| 50 | 800 |
| 55 | 900 |
| 60 | 1000 |
| 70 | 1100 |
| 80 | 1200 |

## 23.8 Requirements for waterjets

For waterjet units the shaft couplings shall meet the requirements in this chapter where applicable.

# 24 ELECTRICAL INSTALLATION

## 24.1 Objective

The objective of the rules in this chapter is to provide installation guidelines for electrical installations in commercial craft, for permanently installed d.c. and a.c. systems with nominal voltages Un ≤ 50 V d.c. respective Un ≤ 500 V a.c.

The rules aim to ensure sufficient safety against electric shocks, to minimize the risk of electrical fires, and to enhance the component reliability for distribution of power.

The rules do not refer to internal installations within classed components.

The capacity requirements for electrical propulsion systems are not within the scope of the rules, instead the requirements have to be evaluated case by case. Electrical propulsion system installations are addressed in standard IEC 60092-507.

Protection against electromagnetic interference refers only to the components used onboard, which should meet IEC 60533 and IEC 60945.

## 24.2 References

In this chapter reference is made to the following documents:

- ISO 10133:2012 Small craft – Electrical systems – Extra-low-voltage d.c. installations
- ISO 13297:2012 Small craft – Electrical systems – Alternating current installations
- IEC 60092-507 Electrical installations in ships part 507 Small vessels
- ISO 16325 Small craft – Electric propulsion systems

## 24.3 Documentation

For assessment of the requirements given in this chapter the following documentation is required:

- electrical load balance calculation;
- list of equipment;
- battery capacity calculations;
- electrical distribution main scheme;
- switchboard circuit scheme;
- other electrical schemes if relevant;
- grounding scheme 1) ;
- instructions for service and use of the equipment
- signed declaration of conformity, where references to the rules used, possible exceptions 1)

signed test protocols according to item 24.12 Testing

1) the requirement is not applied to small installations see 24.4.4.

## 24.4 Definitions

### 24.4.1 Main electric source, secondary electric source, and emergency electric source

Main electric source means in this connection generators, producing power which enables the craft to operate at sea. The main electric source, i.e. the generator may be powered by the propulsion engine, or an auxiliary engine.

Secondary electric source is a battery or battery bank, whose primary task is to supply electricity to essential consumers when the main electric source is not in use. The secondary electric source can be located in the engine space. Typically the secondary electric source supplying the craft's consumers is the service battery bank, with separate batteries for big consumers (for ex. bow thruster, anchor windlass). Starting batteries are not counted as a secondary electric source.

For craft with the additional notation Passenger transport there are additional requirements for the secondary electric source of electricity in Chapter 34.

Emergency electric source is an independent battery bank outside the engine space, or a generator above the fully loaded waterline, whose purpose is to supply electricity only to the radio communication equipment, emergency lighting, and position-indicating radio equipment during at least two hours (GMDSS). Detailed requirements are given in the TraFi regulation Radio Equipment for Ships (TraFi/5379)

### 24.4.2 Essential consumers

Essential consumers are all electrical systems needed for the safe navigation of the craft. For example the following, if applicable:

- the propulsion engine systems;
- the steering system;
- running lights;
- bilge pumps;
- radio equipment;
- navigation equipment;
- communication equipment;
- electrically powered doors and hatches
- fire alarm and extinguishing systems; and
- emergency lighting

### 24.4.3 Main voltage

Main voltage means the voltage supplied by the main electric source.

### 24.4.4 Small installations, definition

In Small d.c. installations the total power of the main electric source of electricity shall be at the most 2 kW (166 Ah 12 V, 83 Ah 24 V) and for the secondary electric source at the most 3 kW (250 Ah 12 V, 125 Ah 24 V).

In Small a.c. installations a.c. is not used as the main voltage, the installation has a single phase, and the main fuse is at the most 1 x 16 A.

### 24.4.5 Easily accessible

Accessible and easily accessible are defined in Chapter 32.

## 24.5 Application

### 24.5.1 Electrical installations

The electrical installations for the craft shall be designed and installed according to

IEC 60092-507, except for Small installations.

The additional requirements and exceptions in the text of this chapter shall be followed.

Component manufacturer’s specific requirements shall be followed.

### 24.5.2 Small installations, alternative standards

When an d.c. or a.c. installation meets the definition for small installations, standard ISO 10133 and ISO 13297 may be used instead, but in addition the following items from this chapter shall always be used:

- 24.3 Documentation
- 24.9 Batteries
- 24.10 Generators and charging equipment
- 24.11 Protection classes for equipment
- 24.12 Testing

### 24.5.3 Electrical propulsion

The installations for electrical propulsion systems shall be made according to standard IEC 60092-507.

## 24.6 General

### 24.6.1 Selection, planning, dimensioning, and installation

All permanently installed equipment essential for the safe operation of the craft shall be selected and installed so that it is suitable for the craft considering its Design Category and possible special missions.

Electrical appliances and equipment shall be planned and installed so they do not pose any danger to life or property. The risk of arc discharge shall also be considered in connection with the installation of electrical appliances and equipment.

The equipment shall not cause unreasonable electrical or electromagnetical disturbance, and the proper function shall not suffer easily from electrical or electromagnetical disturbance. The appliances shall meet IEC 60533 or IEC 60945 requirements as applicable.

All appliances shall be accessible for operation and service.

The appliances shall be selected and dimensioned for functioning properly considering the accelerations and vibrations of the craft (for example operating in ice), overcoming water, temperature variations, sea water, chemicals, oil, UV-radiation, as well as other circumstances to be expected.

The associated cables and piping shall allow some movement for the appliances and equipment.

### 24.6.2 Propulsion machinery starting circuit

Only for propulsion engines with less than 100 kW output it is allowed to use the engine block as a conductor in the starting circuit during the starting operation.

## 24.7 Distribution network

In craft over 15 m with metal hulls all branches of the distribution network shall be fitted with ground-fault circuit interrupters having testing possibility.

All switchboards and consumers shall have a reliable disconnection possibility for service purposes, for example double pole switches or circuit breakers. However, gas alarm, intrusion alarm, heater, and automatic bilge pumps may be connected without disconnection possibility. In this case they shall have their own short circuit propection.

## 24.8 Electrical generation on board.

### 24.8.1 The main electric source

The main electric source shall be one or several generators, which can be driven by their own auxiliary engine, or by the main engine.

Craft in Design Category A and B shall have at least two main electric sources, i.e. two generators.

The capacity of each main electric source shall be sufficient for all electrical requirements of the whole craft in all operating conditions.

### 24.8.2 The secondary electric source

The craft shall have a battery or battery bank to ensure uninterrupted power supply to the essential consumers when the the main electric source of electricity is not in use.

### 24.8.3 The emergency electric source

The emergency source of electricity supplying the radio equipment related to the GMDSS-system (VHF), the emergency lighting, and the position finding (GPS), shall be independent from the battery bank in the engine space.

## 24.9 Batteries and battery banks

### 24.9.1 General

In case the main- and/or auxiliary engine of the craft has electric starting, there shall be both a service battery bank and a starting battery bank.

In normal conditions the starting batteries must not be used for any other purpose than the starting of engines, except for paralleling with the service batteries in exceptional conditions.

For the service and starting batteries there shall be a possibility to connect them in parallel. The service batteries shall be able to function as starting batteries and vice versa.

The service battery bank shall normally supply power to the radio equipment, but additionally there shall be a separate emergency source of electricity for the supply of the radio equipment only.

### 24.9.2 Battery capacities

The secondary electric source shall have a capacity ensuring that the service batteries can supply the essential consumers of the craft alone, without the main and emergency sources, during at least three hours, when the craft is not in operation, and there is a leak in one compartment corresponding to the bilge pumping capacity, also considering emergency radio traffic, in the applicable alternative situations and circumstances.

The emergency source of electricity shall alone have a capacity able to supply the GMDSS-equipment for at least two hours. Detailed requirements can be found in TraFi regulations for marine radio equipment.

The capacity of starting batteries shall meet the engine manufacturer’s requirements, and additionally be according to Formula (24.1):

$$MCA \geq 200 + 80 \cdot \sqrt[3]{P} \quad [A] \qquad (24.1)$$

where MCA is the battery nominal starting current in 0°C during 30 seconds, and P the nominal power [kW] of the engine to be started.

A fully charged starting battery shall be able to provide six times 10 seconds long starting sequences in 0°C temperature without intermediate charging.

### 24.9.3 Battery ventilation

When the battery capacity is at most 5 kWh (416 Ah 12 V, 208 Ah 24 V), the batteries shall be installed in a battery trough or box resistant to battery acid, with ventilation in its top part.

When the battery capacity exceeds 5 kWh (416 Ah 12 V, 208 Ah 24 V), the batteries shall be installed in a separate gastight battery space resistant to battery acid, and ventilated to the open air from its top part.

Batteries at most 5 kWh may be installed in crew spaces provided they are in a gastight box or locker with ventilation to the open air from its top part.

The total cross section of the ventilation ducts, leading upwards from the top of the battery space, shall be at least 800 mm2 for each battery kWh.

When the battery space or locker has forced ventilation, battery charging in fast-charging mode shall be interrupted if the ventilation stops. Forced ventilation shall have ignition protected components.

### 24.9.4 Protection against engine room fire and flooding

In case the batteries are located in the same watertight compartment as the engine space, the batteries shall be protected so that they do not short circuit even if the water level in this compartment rises to the full load waterline.

### 24.9.5 Attachment of battery installation

The batteries shall be reliably attached, so they can stand forces of at least twice their weight in all directions without moving more than 10 mm. Additionally the installation including cables shall stand the relevant accelerations and vibrations.

## 24.10 Generators and chargers

It shall be possible to charge the batteries continuously while the craft is in operation.

### 24.10.1 Charging capacity

The main electric source, i.e. the generators, shall together be able to charge all battery banks within maximum 10 hours to 80% charge level, while the nominal electrical consumption according to the electrical load balance calculation is running simultaneously.

An independent main electric source shall be able to increase the state of charge in the discharged batteries while the maximum electrical consumption is running simultaneously.

The charging current shall be split between the battery banks automatically depending on the state of charge, and loading condition in each bank.

When the batteries to be charged have a total capacity of more than 2 kWh, the craft shall be fitted with a charger fed from an external electrical network, and the maximum charging current shall be at least 5% of the nominal capacity [Ah] for the batteries to be charged, while the charger at the same time supplies the craft's other electrical services.

### 24.11 Degree of protection for the equipment

The degree of protection shall meet the requirements in IEC 60092-507, except for small installations, for them the standards ISO 10133 and ISO 13297 shall be used.

### 24.12 Testing

All electrical systems on board the craft shall be tested before delivery both visually and for proper function according to IEC 60092-507.

- Earthing connection 1)
- Insulation resistance 1)
- Load tests for switchboards and control gear 1)
- Voltage drop for essential equipment
- Proper function of devices and circuits

1) This requirement is not applicable to small d.c. installations.

Test protocols shall be made for all tests, and included in the documentation for the craft.

# 25 INTERIOR

## 25.1 Objective

The rules in this chapter are to ensure basic convenience and safety for persons on board with regard to toilets, ventilation and supply of fresh water.

## 25.2 References

In this chapter reference is made to the standard ISO 8099

## 25.3 Documentation

For the verification of the requirements in this chapter a general layout with installations qualifies.

## 25.4 Toilets

Boats in design categories A and B, where the maximum number of persons (crew+other) exceeds 10, shall be fitted with at least one toilet. Craft without weather tight spaces for accommodation need not comply with this requirement.

Toilet spaces shall have a lockable door and be fitted with lighting. Each toilet space shall have a wash basin with water and drain.

## 25.5 Ventilation

Accommodation spaces shall be ventilated as to ensure sufficient supply and exhaust of air when doors, side scuttles, windows and similar apertures are closed.

The ventilation apertures for inlet and outlet of air shall be so located as to obtain sufficient ventilation to remove moisture from the interior.

Air intakes shall be located so to minimize the intrusion of fuel fumes and exhaust gases. The exhaust outlet from heaters and engines shall be at least 400 mm.

For natural ventilation, the channels shall be as short and straight as possible.

For natural ventilation, the cross section area for the flow of supply and exhaust channels shall be a minimum of 7.5 cm2 per seat.

In craft fitted with devices having an open flame, or a heater which uses air from the interior for combustion, the air ducts shall be sized on basis of the power of the device and the number of persons. For heaters and cookers a cross sectional area of at least 22 cm2 per kW is required.

A cowl with exhaust into the open air shall be mounted above any cooking appliance. The channel shall be fitted with a ventilation fan.

Toilet spaces shall be provided with a separate exhaust into the open air.

## 25.6 Fresh water systems

Fresh water tanks shall be readily accessible for cleaning. The tanks shall have an inspection hatch with a diameter of at least 150 mm.

Fresh water tanks shall be capable of being drained through a valve at the lowest point of the tank or through a suction line. The suction line shall end in a well in the bottom of the tank.

# 26 PERSONAL SAFETY

## 26.1 Objective

The objective of the rules in this chapter is to minimize the risk of falling overboard, to facilitate getting back on board, to minimize the risk of injury caused by unsuitable arrangements on board, to define the emergency routes and emergency exits, and to enable the people on board to find and use the life saving appliances in an emergency.

Note! In Chapters 33...42 there may be additional requirements for the craft type.

## 26.2 References

In this chapter reference is made to the following documents:

- ISO 15085:2003+A1:2009 Small craft – Man-overboard prevention and recovery
- ISO 9094-1:2003 Small craft – Fire protection – Part 1: Craft with a hull length up to and including 15 m
- ISO 9094-2:2002 Small craft – Fire protection – Part 2: Craft with a hull length of over 15 m
- ISO 14946:2001 Small craft – Maximum load capacity

## 26.3 Documentation

For assessment of the requirements given in this chapter it is sufficient that the arrangements are shown on the drawings.

## 26.4 Working deck

### 26.4.1 Definition

Working deck in this connection means outside areas where people can stand or walk during the normal operation of the craft.

### 26.4.2 Accessibility

The general arrangement of the craft shall meet the requirements in Chapter 31 (Accessibility and serviceability).

### 26.4.3 Minimum width of working deck

To facilitate safe moving the working deck shall be near the deck edge, both transversally and longitudinally:

- unrestricted, continuous, and angled at most 15° from the fully loaded waterline (LC2); and
- at least 100 mm wide in Design Category D, 120 mm in Category C, and 150 mm in Category A and B

### 26.4.4 Working deck continuity

The working decks shall be connected to each other. This may mean passing through interior spaces. In case the height changes, or obstacles need to be bypassed, special rules are applied (see standard ISO 15085 4.4).

### 26.4.5 Prevention of falling overboard

Falling overboard from the working deck is prevented by the implementation of one of the appropriate alternatives in Table 26.1, with possible additional requirements related to the craft type, mission, and Design Category. Different alternatives may be applied to separate craft areas.

Table 26.1. Summary of requirements

| **Design category** / **Safety arrangement** | **A** | **B** | **B** | **C** | **C** | **D** |
|---|---|---|---|---|---|---|
| Slip resistant deck areas | x | x | x | x | x | x |
| Foot-stops | x | x | x | | | |
| Handholds on the working deck | x | x | x | x | x | x |
| Guard-rails and guard-lines | x | x | | x[a] | | |
| Hooking points for safety harnesses | x | | x | | x | |
| Handholds in high speed craft | x | x | x | x | x | x |
| Body support in high speed craft and emergency stop | x | x | x | x | x | x |
| Means of reboarding | x | x | x | x | x | x |
| Emergency stop | x[b] | x[b] | x[b] | x[b] | x[b] | x[b] |

[a] Guard-rails or -lines are not required for working decks in case these are used only when the speed is below 4 knots in smooth water, for example when entering harbour.

In all Design Categories it is possible to use the requirements of a higher category.

A handhold according to item 4.8 can also be used as hooking point for safety harnesses.

Different alternatives may also be combined provided the Design Category minimum requirements are met. Example: Foot-stop meeting the requirements for handholds, and located less than 300 mm from the working deck outer edge.

[b] Only for craft with open steering position and speed > $10 \cdot \sqrt{L_H}$ or 25 knots

### 26.4.6 Slip resistant deck areas

Working decks shall be slip resistant. The slip resistant areas must not be continuous, but the distance between slip resistant areas must not exceed 75 mm.

### 26.4.7 Foot-stops

Foot-stops shall be as near the working deck outer edge as practically possible. Foot-stops are not required at the deck aft edge, nor at gates in the guard-rails.

The top edge of foot-stops shall be at least 25 mm above the adjacent working deck level.

### 26.4.8 Handholds on working decks

Handholds which are less than 300 mm from the working deck outer edge, shall be at least 500 mm above the deck level, but not higher than an adjacent superstructure. Handholds located more than 300 mm inboard of the working deck outer edge can be at any height.

### 26.4.9 Guard-rails, bulwarks and guard-lines

The bulwarks and/or guard-rails shall be at least 750 mm high in craft with a hull length of up to and including 15 m, and 1000 mm in craft longer than 15 m. In the bulwarks or guard-rails there must not be vertical openings exceeding 230 mm below the lower rail. The spacing between the other rails shall be maximum 300 mm.

The same requirements as for guard-rails refer for guard-lines. They shall also meet standard ISO 15085.

Gates or chains in guard-rail openings shall be lockable in closed position.

Guard-lines shall have tensioning possibility.

Hooking points for safety harnesses

Suitable attachment points (see standard ISO 15085) shall be located as follows:

- within 1 m from main entrance hatch or door edge;
- within 2 m from all outside steering positions; and
- within 2 m from winch or strong point required for towing.

The hooking points must not be more than 3 m apart.

The hooking point shall fit within a circle having 15 mm diameter. Also other parts of the craft may work as harness hooking points, although not specifically designed for this, for example handholds.

### 26.4.10 Seats

There shall be a seat for each person. In Design Category C and D there may alternatively be standing places, for which the same handhold requirements as for seats are applied.

The minimum dimensions for seats shall be as specified in Chapter 1 item 1.12.1.

The requirements for width and horizontal length do not apply for seats where the person has to sit astride. In craft having a maximum allowed speed exceeding $10 \cdot \sqrt{L_H}$ or 25 knots, pontoons (see Chapter 4 clause 4.17.2) are not allowed as seats.

The seats and their attachment shall be sufficiently strong for the intended conditions of use.

A seat for one person shall stand 1.8 kN force in any direction without breaking, as well as the vertical accelerations according to Chapter 7 item 7.4.

For each seat there shall be at least one handhold.

When the dynamic loading factor according to Chapter 7 item 7.4 exceeds 4 in fully loaded condition, there shall be arrangements enabling the crew to dampen the accelerations for example by using well padded saddle or spring damped seats.

Damped seats shall be located so their movements do not create risks for the occupant's heads hitting the craft structure.

### 26.4.11 Handholds in high speed craft

Craft with a top speed exceeding $10 \cdot \sqrt{L_H}$ or 25 knots shall, irrespective of Design Category, have arrangements for supporting the persons on board so the risk of being thrown overboard in tight turns, fast accelerations, or big waves is minimized. When arranging support for the persons on the seats one of the following alternatives shall be used:

- one handhold plus body support according to item 26.4.13; or
- two handholds arranged so continuous holding on with both hands is possible

Note! One handhold may serve as two handholds, provided it is long enough so the hands can be at least 200 mm apart.

The handholds shall be located in relation to the seat so the person is able to stay in place securely. For a sitting person this means that the handholds shall be at least 0.3 m above the seat, and for a standing person at least 1.0 m above the deck.

A handhold intended for one hand shall stand 1.8 kN force in any direction per user, in case there are more than one user at the same time.

### 26.4.12 Body support in high speed craft

Craft with a top speed exceeding $10 \cdot \sqrt{L_H}$ or 25 knots where the persons onboard are sitting, shall have working deck seats fitted with body support at least 120 mm high above the solid seat bottom, or in case the seats are padded, above the compressed padding.

The purpose of the body support is to prevent the person primarily from falling overboard, or over a higher located edge.

In case the persons on board are standing or leaning against the seat, the body support can brace only the back of the person.

In case the persons on board are sitting astride on saddle seats the body support can be considered to be given through the knees.

Saddle seats and leaning seats shall have strength equal to single seats.

#### 26.4.13 Emergency stop

Craft with an open steering position and top speed exceeding $10 \cdot \sqrt{L_H}$ or 25 knots shall have an emergency stop for the engine, shutting it off if the driver tumbles from his position.

#### 26.4.14 Means of reboarding

All craft shall have permanently installed ladders or equal for reboarding, enabling a person in the water to climb on board unaided. Ladders which can swing under the craft are not approved. The lowest foot step shall be at least 560 mm below the light service condition waterline. Additionally, there shall be suitable handholds for climbing up to the working deck.

In case a permanent system along the guidelines above is not installed, it shall be demonstrated by a practical test that climbing on board the craft is possible unaided. The test person shall have a dry weight of 85 kg with equipment, with suitable clothing and a life vest during the test.

### 26.5 Minimizing the risk of injury on board

#### 26.5.1 Doors and passageways

Doors and passageways shall be at least 500 mm wide.

#### 26.5.2 Sharp edges

There shall be no sharp edges or protusions which can cause personal injury. On the decks there must not be any stumbling risk.

#### 26.5.3 Securing of heavy objects

Heavy unattached objects shall be secured properly.

#### 26.5.4 Hot surfaces

Hot surfaces shall be protected in case their temperature exceeds 80°C, and their location allows accidental contact with persons on board.

### 26.5.5 Rotating machinery

Rotating machinery and components shall be protected so injury can be avoided (see also Chapter 21 Propulsion machinery)

### 26.5.6 Falling and loosing balance

In addition to the working deck attention shall also be paid to crew spaces, where the risk of injury shall be kept small by providing handholds and guard-rails if applicable in passageways, stairs and sitting areas.

## 26.6 Emergency routes and emergency exits

It shall be possible to evacuate people from the interior to the life saving appliances in case of a fire or sinking emergency. The following requirements shall be met irrespectible of the living quarter arrangements:

- in case there are two emergency routes only one of them may go through the engine space;
- in case the emergency route passes any surface of a cooker or open flame heater at less than 750 mm distance, there shall be alternative route;
- In a closed galley this requirement is not applied if there is a dead end within less than 2 m distance; and
- any emergency route must not pass straight over a cooker or open flame heater.

### 26.6.1 Open living quarters

In case living or sleeping quarters are not separated from the closest exit door, meaning that people can reach the exit door without passing through any door, the following applies:

- the distance to the nearest exit shall not exceed LH/3 or 5 m, the smaller applies; and
- the distance shall be measured as the shortest horizontal distance to the centre of the exit from
- the furthest point where a person can stand regardless of headroom; or
- the centre of a berth, whichever is further

### 26.6.2 Closed living quarters

In case living or sleeping quarters are separated from the nearest main exit with a bulkhead and door, the emergency routes and exits shall be arranged considering the risk of people getting trapped, and

- living quarters shall have more than one emergency exit, leading to the open air, except when in question is one cabin, where maximum four people can stay, and the exit leads straight to the open air without passing through or over the engine space, or over a cooker, and there is no cooker or open flame heater in the cabin;

- the emergency exits for separate cabins where maximum four people can stay, and having no cooker or open flame heater, shall form common emergency exits for at most 2 m length measured from the door or entrance;
- shower- and toilet spaces are considered a part of the cabin or passage into which their doors open, and for them alternative emergency exits are not required; and
- for living quarters on several decks the exits shall not lead to the same section.

### 26.6.3 Emergency exits

All emergency exits in living quarters shall have the following free areas:

- rectangular shape minimum 500 x 500 mm; and
- other shape: the exit to be sufficiently large so a circle with 500 mm diameter fits through.

Emergency exits shall be easily accessible. Exits opening to the weather deck or open air shall be openable from both in- and outside when they are secured, but not locked.

In case a deck hatch is intended as emergency exit, it shall be fitted with steps, ladders, or stairs. The vertical distance between the uppermost step and the emergency exit shall be at most 1.2 m. These aids shall be permanently installed in the cabin, and marked if not self-evident.

Emergency routes and -doors shall, in case not self-evident, be marked with the appropriate ISO- or national symbols.

Accessibility to life saving appliances

Life saving appliances shall be easily accessible from the weather deck (definition see Chapter 2).

In craft meeting the One compartment subdivision requirements in Chapter 6 the life saving appliances shall be easily accessible in the flotation condition resulting after the filling of any one compartment.

FIRE SAFETY

## 26.7 Objective

The purpose of the rules in this chapter is to identify the fire risks during the operation of the craft, and provide the means of minimizing the consequences of fire. In small craft (LH ≤ 15 m) the main objective is to detect, limit, and extinguish any fire at its outset, and ensure the immediate availability of effective extinguishing means. In larger craft the objective is to additionally limit the use of flammable materials, as well as materials giving off smoke and poisonous gases when burning, and to protect means of escape and emergency routes.

## 26.8 References

In this chapter reference is made to the following documents:

- The 2000 International Code of Safety for High-Speed Craft (2000 HSC Code)
- IMO MSC/Circ.911, ”Interpretation of fire protection related provisions of the HSC Code”
- International Code for Fire Safety Systems (FSS Code) 2007 edition
- International Code for Application of Fire Tests Procedures (FTP Code ) 2010
- ISO 9094 Small Craft – Fire Protection
- ISO 14895:2003 Small craft – Liquid-fuelled galley stoves
- ISO 4589-3:1996 Determination of burning behaviour by oxygen index – Part 3: Elevated-temperature test
- ISO 10239:2008 Small craft – Liquefied petroleum gas (LPG) systems
- ISO 9705 Fire tests – Full-scale room test for surface products
- ISO 5066 Reaction-to-fire tests – Heat release, smoke production and mass loss rate

## 26.9 Documentation

For assessment of the requirements given in this chapter the following documentation is required:

- Drawings and other documents showing, if applicable:
    - fire resistant bulkheads:
    - the construction and materials for the above;
    - the inherent fire risk areas (engine space, storage of hazardous substances);
    - the galley;
    - emergency exits.
- approval and test protocols for interior materials
- ventilation ducting schemes;

- information about fire extinguishing equipment
    - the manufacturer of the fixed extinguishing system, type, capacity and installation requirements
    - the location of cylinders and orifices; and
    - portable extinguisher type, capacity, and location

## 26.10 Definitions

In addition to the definitions given in this rule, terms are also defined in standard ISO 9094.

### 26.10.1 Fire resisting divisions

Fire resisting divisions are divisions enclosed within bulkhead- and deck materials certified according to the Marine equipment directive 2014/90/EU and resisting the fire the prescribed time. Alternatively, prototype bulkheads or -decks can be subject to a fire test procedure according to the FTP Code in order to demonstrate equal fire resistance.

### 26.10.2 Fire resisting materials

Fire resisting materials are materials meeting the Fire Test Procedure Code (FTP code).

### 26.10.3 Non-combustible material

Non-combustible material is a material which when heated to 750°C does not burn or develop flammable gases in sufficient amounts for ignition according to the Fire Test Procedures Code (HSC Code 7.2.3 and FTP code)

Standard fire test

A standard fire test is a test where specimens of the relevant bulkheads, decks, or other constructions are exposed in a test furnace by a specified test method in accordance with the Fire Test Procedures Code (HSC Code 7.2.4)

### 26.10.4 Steel or other equivalent material

Where the words steel or other equivalent material occur, ”equivalent material” means any non-combustible material, which by itself or due to insulation provided, has structural and integrity properties equivalent to steel at the end of the standard fire test. Such a material is for example aluminium alloy with appropriate insulation (HSC Code 7.2.5)

### 26.10.5 Low flame-spread

Low frame spread means that the surface will restrict the spread of flame in accordance with the Fire Test Procedures Code (HSC Code 7.2.6)

### 26.10.6 Fire detection and alarm

Fire detection and alarm means a system that gives an alarm, generally at the main helm position, and is equipped with fire detection.

### 26.10.7 Fire alarm

*Fire alarm* means separate alarm units which function locally and independently.

## 26.11 Firefighting

### 26.11.1 General arrangements

The bilges where overflowing flammable liquids may collect, shall be accessible for cleaning.

The spaces where petrol- or diesel engines or fuel tanks are located, shall be separated from enclosed accommodation according to the requirements in standard ISO 9094.

Limitations regarding fuel tank materials and testing of the tanks is presented in Chapter 22 clause 22.6.5.

### 26.11.2 Escape ways and emergency exits

Escape ways and emergency exits shall be arranged according to Chapter 26.

### 26.11.3 Cooking and heating appliances

The general safety of the installation shall meet standard ISO 9094 and ISO 14895.

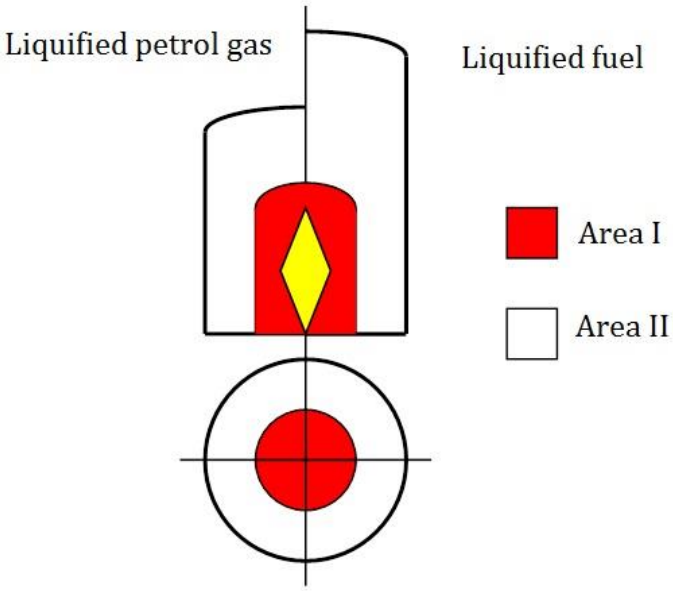


Figure 27.1: The areas with specific requirements for their surface materials

### 26.11.4 LPG gas installations

LPG gas installations shall meet the requirements in standard ISO 10239.

### 26.11.5 Ignition protection

Only equipment ignition protected according to standard 8846 shall be installed in spaces where there are any of these:

- a petrol engine or -tank;
- a LPG gas tank;
- petrol fuel system components;
- LPG gas system components except for connections in accommodation near LPG appliances
- portable petrol tank.

## 26.12 Requirements for material and arrangements

### 26.12.1 General

The following spaces are considered fire hazard areas:

- Engine spaces, excluding spaces for small engines ≤120 kW;
- Spaces containing flammable substances (flashpoint below 60°C, does not refer to diesel oil)

The surroundings of cookers and heaters are treated according to item 27.5.3.

In fire hazard areas the materials used in the structure or insulation shall be at least fire resisting, the surface against the engine shall not absorb fuel, and the material oxygen index shall be at least 21 according to standard ISO 4589-3 when the surrounding temperature is 60°C.

### 26.12.2 Fire resisting divisions (for length of hull over 15 m)

Fire hazard areas shall be arranged to form fire resisting divisions, separated from accommodation, working spaces, passages and outside spaces.

The structure shall consist of non-combustible materials (see 27.4.3) or fire resisting materials (see 27.4.2) and insulated with at least 50 mm thick non-combustible mineral wool, having a density of at least 100 kg/m3 or having fire class A-30. Materials tested according to ISO 9075 or ISO 5660 may be accepted here as fire resisting.

Steel surfaces against the open air need not be insulated, unless the surface in question is used in emergency situation such as access to fire pump, escape routes, routes leading to the life raft.

Insulation is not required further down than 300 mm below the waterline.

Penetrations shall be at least approved for A-0 fire divisions (FTP Code).

### 26.12.3 Restrictions to the use of burning materials (for length of hull over 15 m)

When insulation is installed in areas where it may come in contact with a flammable fluid or its vapour, the surface of the insulation must not allow the fluid or vapor to pass through.

For the following surfaces the minimum requirement is low flame-spread:

- the exposed surfaces in closed passages and stairwells;
- bulkheads (including windows) as well as wall and overhead covering in accommodation, control rooms, and helm stations.

Heat- and sound insulation shall be non-combustible or fire resisting on the above mentioned surfaces.

The insulation vapor barrier and glue, or refrigeration tubing attachment insulation need not be non-combustible or fire resisting, but their amount shall be kept as small as practically possible, and their exposed surfaces shall have low flame-spread.

In closed passages or stairwells the exposed surfaces, bulkheads (including windows) as well as wall and overhead covering in accommodation, control rooms and helm stations shall consist of materials which do not produce excessive amounts of smoke and toxic gas when burning, as prescribed by the FTP Code.

### 26.12.4 Exhaust piping

The exhaust piping shall be designed and arranged to ensure that the exhaust gases are led safely to the open air.

The exhaust pipes shall be arranged so the fire hazard is minimized. For this purpose the exhaust system shall be insulated (this does not refer to wet exhaust systems).

All spaces and structures near the exhaust system, or which may be heated up by the exhaust gases either in normal use or in exceptional conditions, shall be of non-combustible materials, or be protected and insulated with non-combustible materials considering high temperatures.

## 26.13 Ventilation control

### 26.13.1 General (for length of hull over 15 m)

It shall be possible to close the inlets and outlets of all ventilation systems from a location outside the ventilated spaces.

### 26.13.2 Ventilation fan controls

It shall be possible to shut off all fans for the fire hazard areas from a continuously manned control room or helm station outside the ventilated area, and outside the space where the fans are located.

The controls for shutting off the engine space ventilation shall be located separately from the controls for shutting off the ventilation for other spaces.

### 26.13.3 Fire damper controls (for length of hull over 8 m)

Fire dampers shall be installed in fire resisting spaces, and shall have manual controls operable from both sides of the division where they are installed.

Fire dampers installed in ventilation ducts for basically unmanned spaces (such as engine spaces, stores, and toilet spaces) it is sufficient that the dampers can be closed manually from outside of the spaces.

### 26.13.4 Deck penetrations (for length of hull over 15 m)

Where ventilations ducts penetrate decks the arrangement shall be such that the deck effectiveness of preventing fire from spreading is not reduced, and that the probability of smoke and hot gases spreading from one space to another is reduced.

## 26.14 Fire detection- and alarm systems

### 26.14.1 General

The engine space shall have a fire detection system, with its alarm at the craft main helm position. In other spaces a fire alarm is sufficient in craft below 15 m length.

### 26.14.2 Areas to be protected (for length of hull over 15 m)

Fire hazard areas and other enclosed non-manned areas located within crew- and public spaces, such as toilets, stairwells, passages, and escapeways, shall be fitted with automatic smoke detectors connected to the alarm system. In the galley heat detectors may be used.

Propulsion engine spaces shall additionally be fitted with fire detection based on other signs than smoke.

Gas turbines shall be monitored with flame detectors.

### 26.14.3 Requirements for the system

The required fire detectors, their alarms, and the fire alarms shall be intended for marine use.

All the required permanently installed fire detectors, their alarm systems, and the fire alarms shall be continuously ready for immediate use.

In connection with each fire detector there shall be a clear description of the spaces protected, and where they are located. This is not required if the sensor is integrated into the alarm.

Necessary instructions and spare parts for testing and maintenance shall be supplied.

The sensors shall detect heat, flames, smoke or other combustion gases, or their combinations. Flame detectors shall be used only in addition to smoke and heat detection (see item 27.8.2).

The fire detection system must not be used for any other purpose, except for the closing of fire doors or equal functions on control panels.

### 26.14.4 Installation requirements

Where permanently installed fire detection and alarm is required for the protection of spaces, at least one sensor for each space is required, except for stairwells, passages, and escapeways.

The sensors shall be located optimally for detection of fire. They shall not be fitted close to beams or ventilation conduits or other locations where air flow may disturb the proper function of the sensor. Further locations shall be avoided where shock loads or mechanical damage is probable.

Fire detection system electrical cabling shall not be routed through fire hazard areas like the engine space, except where this is necessary for the protection of the spaces in question, or for the connection to the power supply.

## 26.15 Fire-extinguishing systems – general

Fire hazard areas shall be protected with a fixed fire-extinguishing system, operated from a control station conveniently located for this fire hazard.

In case there is only one engine of 120 kW or less in the engine space, the fire protection can be a portable extinguisher launched through a fire port in the engine casing, according to the requirements in standard ISO 9094.

Other areas to be protected with portable extinguishers.

## 26.16 Fixed fire-extinguishing systems

### 26.16.1 Fixed fire-extinguishing system control

A fixed fire extinguishing system shall be operable from the main helm position or, in case this position is more than 5 m away from the protected space, there shall be controls for activating the fire-extinguishing locally.

Automatic fire-extinguishing may be accepted provided the extinguishing agent does not present any danger to people, and the extinguishing does not need other activities, as for example closing of fire dampers, shutting down of engine, or some other intervention necessary for the extinguishing. Solely the release of fire extinguishing agent is not accepted.

The controls for fixed fire-extinguishing systems shall be simple and immediately ready for use. They shall be grouped into as few locations as possible, however so that in case of fire their connection to the protected space is not cut off. In each location there shall be clear instructions to the crew for the use of the extinguishing system.

In case the extinguishing agent is of a suffocating type, or the protected space is large enough for people to enter, a warning signal shall be sounded before the extinguishing agent is released.

In case the engine is able to suck in the extinguishing agent and thereby prevent the extinguishing, it is necessary to shut down the engine before the extinguishing agent is released into the engine space (see ISO 9094).

### 26.16.2 The amount of extinguishing agent

The amount of extinguishing agent shall be sufficient for the space to be protected. In engine spaces with CO2 –systems the amount of CO2 shall be at least 1.5 kg/m3 of engine space gross volume. The smallest accepted amount is 2 kg. At least half of the gas shall be released into the space during 10 seconds. There shall be arrangements in the space for closing all openings through which air can enter or gas can escape.

### 26.16.3 Pressure vessels and tubing

The extinguishing agent distribution tubing and the discharge nozzles shall be located for achieving an even distribution of the extinguishing agent.

The installation for all components shall follow the requirements in standard ISO 9094, and the system manufacturer's instructions.

The pressure vessels and tanks for the storage of extinguishing agent may be located in the engine space or in the space to be protected, in case accidental release of the agent does not present any danger to people.

CO2-bottles must not be located in the engine space.

The connection between CO2-bottle valves and system pipelines shall be made with the approved flexible high pressure hoses intended for this purpose.

## 26.17 Portable extinguishers

### 26.17.1 Location and type

Portable extinguishers shall be ready for use, and located visibly so they are immediately available in the case of fire.

Extinguishers may be located in lockers whose door is clearly marked with the appropriate ISO symbol.

The extinguishers shall be located so their function is not restricted by weather conditions, vibration, or other external factors.

It shall be clearly visible if a portable extinguisher has been released.

In control rooms or other spaces containing electrical equipment important for the safety of the craft, the extinguishing agent of portable extinguishers must not conduct electricity nor cause damage to electrical components.

Portable CO2 –extinguishers may be installed in enclosed accommodation only where there are flammable liquids (for example a galley) or high-voltage equipment, such as electrical motors, batteries, or a main switchboard. A warning text shall be posted near such an extinguisher according to standard ISO 9094.

The minimum capacity of any extinguisher shall not be smaller than 8A/68B (usually 2 kg) and at least one extinguisher must be 34A/183BC (usually 6 kg).

All extinguishers shall meet the requirements in standard EN 3.

### 26.17.2 Number

The number of portable extinguishers and their location shall be as follows:

an extinguisher shall be located not more than 2 m (1 m if the craft length of hull is below 10 m) of unobstructed distance from the main helm position;

an extinguisher shall be located not more than 2 m from a permanently installed cooker, or from any application with an open flame;

one extinguisher for each 20 $m^2$ of accommodation area, not more than LH/3 m from the centre of any bed; and

outside every entrance to engine spaces there shall be an extinguisher suitable for extinguishing a fire in the engine space.

## 26.18 Fire pumps, waterpipes, hydrants and hoses (for length of hull over 15 m)

Fire pumps and accessories shall be installed for all craft over 15 m length, or alternative efficient extinguishing systems as follows:

- at least one independently powered fire pump is required.
- the fire pump capacity shall be at least 15 m3/h (250 l/min)
- each fire pump shall produce sufficient water pressure for the continuous use of the hydrants.
- the hydrants shall be located so all parts of the craft can be extinguished with water jets from the hydrants.
- All fire hoses shall be of durable materials, and their maximum length approved by the authorities. Fire hoses including the required fittings and tools shall be stored ready for use in easily found locations near the hydrants. Indoors the fire hoses shall be continuously connected to the hydrants.
- there shall be one fire hose for each hydrant.
- all fire hoses shall be fitted with approved dual-mode (spray/jet) nozzles with shut-off valves.

## 26.19 Miscellaneous

### 26.19.1 Doors and hatches in fire protected spaces

All openings shall be fitted with permanently installed closing appliances, which shall be at least as fire resistant as the spaces where they are located.

All doors shall be openable from both sides by one person.

### 26.19.2 Fire protection plan (for length of hull over 15 m)

For craft with a hull length over 15 m length there shall be a fire protection plan permanently posted for captain and crew, where the following locations are clearly shown:

- control stations
- fire resisting spaces
- fire detection and alarms
- sprinkler installations
- fixed and portable extinguishers
- access doors to the spaces
- ventilation system (including information about main fan controls, location of fire dampers as well as the ventilation fan identification numbers for the various compartments)
- location of all control devices.

# 27 ANCHORING, MOORING AND TOWING

## 27.1 Objective

The objective of the rules in this chapter is to ensure that the craft is fitted with the proper equipment for mooring, anchoring and temporary emergency towing, taking the intended design category into account.

## 27.2 References

In this chapter reference is made to the following documents:

- ISO 15084 Anchoring, mooring and towing - Strong points

## 27.3 Documentation

To verify that the requirements presented in this chapter are met, the following documentation is required:

- Layout of mooring points and equipment;
- Number, weight and type of anchors;
- Type and size of anchor warps and –chains;
- Drawing to determine frontal area of craft.

## 27.4 Mooring equipment

All craft shall be fitted with at least one mooring cleat or bollard forward and one aft. When two cleats or bollards are fitted forward or aft, they shall be located as near as possible to the deck edge.

At least one cleat or bollard forward and one aft shall be located to facilitate towing.

Cleats and bollards shall be strongly designed and mounted. The cleat or bollard, including its fastening, shall be capable of withstanding a horizontal tensile load P according to formula 29.1:

$$P = f_{SP}(4{,}3 \cdot L_H - 5{,}4) < m_{LDC} \qquad \text{[kN]} \qquad (29.1)$$

Appropriate reinforcements shall be provided in the way of cleats and bollards. Bolts, nuts and other mounting details shall be made of corrosion resistant material.

The craft shall be equipped with at least three mooring ropes of a length and minimum breaking strength as per formula 29.2.

$$L_M = 2{,}0 \cdot L_H \qquad \text{[m, kN]} \qquad (29.2)$$

## 27.5 Anchoring equipment

The anchor weight for traditional anchors is obtained from formula 29.3

$$m_{ANC} = k_{FH}\left(3{,}0 \cdot A_x + \frac{m_{LDC}}{2000}\right) \text{, min 6 kg} \quad [\text{kg}] \qquad (29.3)$$

Where

$A_X$ = frontal area of craft including superstructures, [$m^2$] in loaded displacement condition (LC2).

$k_{FH}$ = factor for design category, see Table 28.1.

If the anchor is of a type with extra-high holding capacity, e.g. anchors approved by a recognized classification society with the designation "High Holding Power", the required anchor weight may be reduced by 25%.

If the anchor is of a type approved by a recognized classification society with the designation "Super High Holding Power", the required anchor weight may be reduced by 50%.

The required anchor weight shall be increased by 10% when divided between two anchors.

Each anchor shall have a warp or chain of a length of at least four times the length of hull of the craft.

The reaking strength of the anchor warp/chain shall be at least 80% of formula 29.1 but must not exceed the actual breaking load of the bollard or mooring cleat.

At least one anchor shall be equipped with a short chain of a length according to Formula 29.4:

$$L_{CH} = 0{,}85 \cdot L_H \quad [\text{m}] \qquad (29.4)$$

No chain is required if the anchor warp is leaded rope or similar heavy rope.

The anchor equipment shall be suitably located to facilitate rapid and safe deployment without use of tools.

If the weight of the anchor exceeds 20 kg, there shall be an arrangement to facilitate lifting (windlass).

Table 1. Correction factors for anchor equipment.

| **Design category** | $f_{SP}$ | $k_{FH}$ |
|---|---|---|
| A | 1,00 | 1,00 |
| B | 1,00 | 0,90 |
| C | 0,90 | 0,70 |
| D | 0,75 | 0,50 |

## 27.6 Towing

The requirements in this chapter covers only temporary towing of the craft by another craft in an emergency situation. Craft, which are intended for towing other craft or floating objects shall meet the requirements in Chapter 34.

# 28 MAIN HELM POSITION ARRANGEMENTS AND NAVIGATION LIGHTS

## 28.1 Objective

The objective of the rules in this chapter is to ensure that the visibility at the main helm position is sufficient, the control devices used for the maneuvering of the craft are properly located, and the navigation lights meet the International Regulations.

NOTE! The requirements for special missions in connection with Additional Notations are given in Chapters 33...41. The requirements for high-speed craft seats are given in Chapter 26.

## 28.2 References

In this chapter reference is made to the following documents:

- Convention on the International Regulations for Preventing Collisions at Sea, 1972 (COLREGs)
- ISO 11591:2011 Small craft, engine driven – Field of vision from helm
- ISO 11592:2001 Small craft less than 8 m length of hull – Determination of maximum propulsion power rating

## 28.3 Documentation

For assessment of the requirements given in this chapter a drawing is required, enabling the visibility at the main helm position to be assessed.

## 28.4 Visibility at the main helm position

### 28.4.1 General

The main helm position, or other control station, from which the craft is maneuvered, shall be arranged so that the helmsman has sufficient visibility in reference to the speed of the craft. This does not mean that the visibility may be limited in some certain loading condition. In such cases sufficient visibílity shall be ensured by increasing the number of watchmen, and/or reducing the speed of the craft.

The field of visibility is defined horizontally (item 29.4.2) and vertically (item 29.4.3).

The field of visibility is defined in relation to the view point, which corresponds to the eye position.

The highest and lowest viewpoints represent the vertical limits.

The field of visibility is assessed with practical tests in light service condition, and fully loaded condition, as well as other possible loading conditions if applicable.

The visibility may be restricted only at the craft planning threshold ± 2 knots, provided however, that the visibility requirement is met, when standing or in some other way, 50 m from the view point to the horizon.

Helm stations which can be used both sitting and standing shall meet the requirements in one of the cases.

In case the craft has several helm stations, at least one of them shall meet the visibility requirements.

### 28.4.2 Horizontal field of visibility

From the helm station there shall be 112.5° horizontal visibility on the right side of the craft, and 90° on the left side (Figure 29.1, sector A)

When the craft top speed is at most 30 knots in light service condition (loading condition LC1) it is assumed that the horizontal distance between the eyes is 70 mm, and both eyes are open.

When the craft top speed is over 30 knots in light service condition (loading condition LC1) the assessment is made assuming one view point.

In front of the helmsman there shall be a central field of visibility extending from straight forward to 15° to each side. Within this sector there shall not be blind spots simultaneously for both eyes when the head is moved 35 mm in the horizontal direction. (Figure 29.1, sector B).

Additionally, there shall be a field of visibility extending between 90° and 112.5° on the left side, and within this sector there shall not be blind spots if the view point is moved 0.5 m horizontally forward from the normal position (Figure 29.1 sector C).

Aft there shall be a field of visibility 112.5...180° each side of the centreline (Figure 30.1, sector D).

In this sector it shall be possible to maintain the visibility without moving sideways more than 0.5 m to each side if the craft is helmed sitting, and 1 m to each side if the craft is helmed in standing position.

### 28.4.3 Vertical field of visibility

Vertically the field of visibility shall extend from the lower border to a line, which at the speed defined in 29.4.1 in the actual load condition is parallel with the water surface and is located at the level of the highest view point (see Figures 29.2 and 29.3).

### 28.4.4 Requirements

From the view point in question the water surface shall be visible from $4 \cdot L_H$ or 50 m, whichever is smaller, all the way to the horizon, according to the field of visibility defined in 29.4.2 and 29.4.3.

This distance to be defined from the limiting structure the in forward direction.

During normal turns the horizon shall be visible according to the horizontal field of visibility sector in 29.4.2.

The number and size of blind spots shall be minimized, so they do not cause a critical reduction of the visibility from the helm station. In unclear cases the visibility shall be assessed according to standard ISO 11591.

Return to the cover page

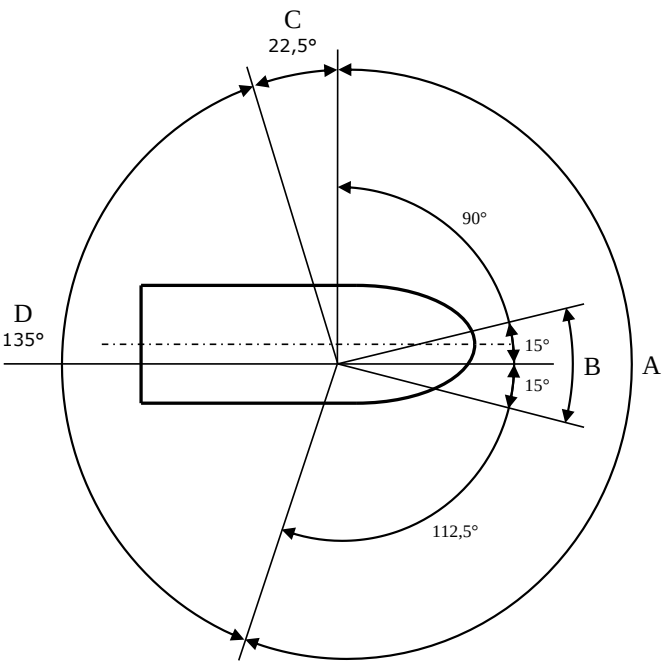


Figure 29.1: Horizontal field of visibility

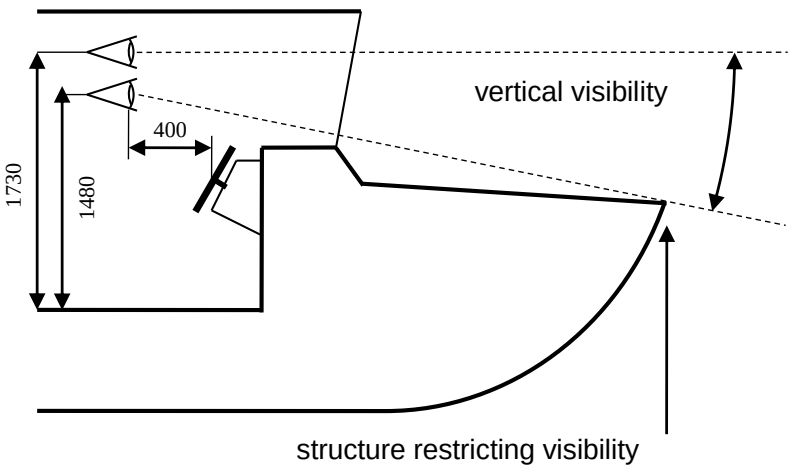


Figure 29.2: Vertical field of visibility when helmsman is standing at the helm

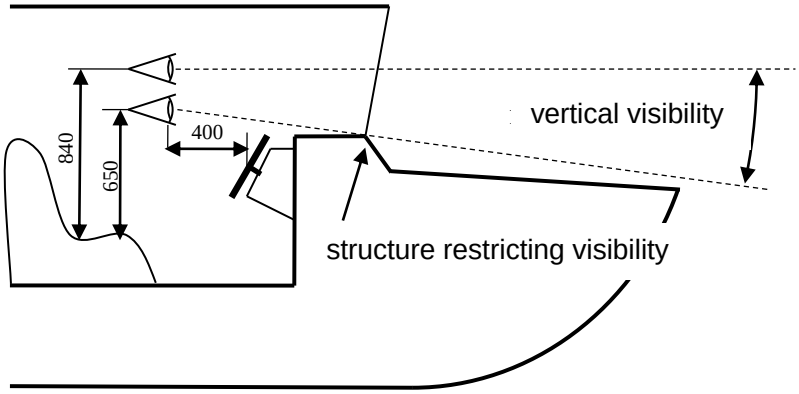


Figure 29.3: Vertical field of visibility when helmsman is sitting at the helm

### 28.4.5 Illumination

Glare and stray reflections shall be avoided at the helm station. Materials with matte finish shall be used in order to avoid stray reflections.

In areas where illumination is required when the craft is in operation, red lights shall be used in order to help adaptation to night vision.

On decks and outside the helming station the illumination shall be arranged so the safe operation of the craft is not endangered.

### 28.4.6 Windows

It shall be possible to maintain the visibility through the helm station windows in all weather conditions.

Craft with enclosed helm stations shall have windshield wipers and de-misting at least for the windows in the central field of visibility (see item 29.4.2).

The windows within the field of visibility shall not be tinted or polarized. Removable sunscreens with slight colour distortion are permitted.

## 28.5 Control equipment

The main controls for maneuvering and speed, as well as secondary controls such as trim tabs and stern drive angle, shall be located within reach at the helm station.

The compass and other essential instruments shall be located at or be available or readable from the helm station.

In craft with a top speed exceeding 25 knots, it shall be possible to operate all control devices related to steering without taking both hands off the steering wheel at the same time.

### 28.6 Navigation lights

The craft shall have navigation lights according to COLREGs, see item 29.2. Unless the function of each light can be monitored from the helmsman's position, there shall be indication lights or similar inside when the helm position is enclosed.

# 29 HANDLING CHARACTERISTICS AND DETERMINATION OF ENGINE POWER

## 29.1 Objective

- The objective of the rules in this chapter is to ensure that the performance features are such that:
- the craft can keep a straight course both at low and full speed;
- the craft can avoid a collision with an obstacle in its way;
- the craft can be maneuvered properly also when going astern;
- the craft's propulsion power is not too high in relation to the dynamic stability for holding a straight course and turning at high speed;
- all the above mentioned properties are acceptable considering the loading conditions; and
- the craft can be maneuvered at low speed even when the main steering system is out of order.

## 29.2 References

The rules in this chapter are based on the requirements in the international standard ISO 11592 Small craft – Determination of maximum propulsion power rating.

## 29.3 Documentation

For assessment of the requirements given in this chapter a sea trial report is required, stating, if applicable:

- the weights on board during the trials;
- the maximum speed achieved;
- the measured turning radiuses;
- an assessment about the function of the emergency steering; and
- other observations referring to the safety of the craft

## 29.4 Requirements

In Table 30.1 a summary of the requirements is given. Item 30.5 gives a more detailed explanation of the assessment procedure.

Table 30.1: Summary of the requirements related to handling characteristics

| Feature | Trials for the determination of engine power and handling characteristic | | | |
|---|---|---|---|---|
| | $V_{MAX} \leq 7 \cdot \sqrt{L_{WL}}$ | | $V_{MAX} > 7 \cdot \sqrt{L_{WL}}$ | |
| | *LC1* [1)] | *LC2* [2)] | *LC1* | *LC2* |
| Keeping a straight course | x | x | x | x |
| Alternating turns at full speed (zig-zag-test) | x | - | x | - |
| Turning, normal speed | x | x | x | x |
| Avoidance test (simple method) | x | - | - | - |
| Avoidance test (extended method) | - | - | x[3)] | - |
| Crash stop | Alternative to avoidance test if LH ≥ 8.0 m | | | |
| Going astern | x | x | x | x |
| Emergency steering test | When emergency steering is required | | | |

[1)] and [2)] Loading condition LC1 and LC2, see. Luku 4 item 4.6.2 and 4.6.3

[3)] Need not be carried out using greater speed than $3L_H$ + 24 knots max. 70 knots. Further, reduced speed $\geq 0{,}85 * V_{MAX}$ is allowed, if a warning sign showing the maximum safe avoidance speed according to standard ISO 11592 is installed.

The requirements for hovercraft are given in Chapter 41.

## 29.5 Assessment

### 29.5.1 Loading and weather conditions

The assessment shall be made with the craft in Light condition, and Fully loaded condition, according to Table 30.1.

The avoidance line test and zig-zag- test at full speed are not made in fully loaded condition.

In fully loaded condition the weight distribution both longitudinally and vertically shall be realistic.

The floating position shall be as near the loading conditions used for the assessment of stability and freeboard as possible.

All heavy items shall be properly secured during the testing.

The significant wave height during the testing shall not exceed 0.2 m.

### 29.5.2 Keeping a straight course

All craft shall be able to keep a fairly straight course at full speed in all loading conditions. For craft where purposing or chine walking occurs, it shall be possible to eliminate the dynamic unbalance with the trim tabs only, without active helming or speed reduction.

### 29.5.3 Alternating turns at full speed (zig-zag-test)

The dynamic stability shall be tested for all craft at full speed in light service condition by turning the wheel to both sides in a suitable rhythm until the craft possibly begins to oscillate by itself.

If oscillation occurs, it shall stop within a reasonable time simply by putting the wheel into centre position, without active helming or speed reduction.

The helmsman shall be particularly alert, and ready to reduce speed if the oscillations tend to increase.

### 29.5.4 Avoidance test at high speed

The craft shall approach the turning point at high speed, there a sharp 90 degrees turn is initiated. During the turn all craft shall be able to keep the turning radius R between the values given in Formula (31.1) and (31.2) in both directions. The turning radius R corresponds to the distance needed for avoiding a fictitious obstacle;

$$R \leq 6 \cdot L_H \text{ [m]; } V_{MAX} < 30 \text{ kn} \qquad (31.1)$$

$$R \leq 6 \cdot L_H + (0{,}1 \cdot L_H + 1{,}2) \cdot (V_{MAX} - 30) \text{ [m]; } V_{MAX} \geq 30 \text{ kn} \qquad (31.2)$$

The test is performed at maximum speed, however not exceeding $V_{TEST}$;

$$V_{TEST} = 3 \cdot L_H + 24 \leq 70 \qquad \text{[kn]} \qquad (31.2)$$

Further, a test speed reduced from the maximum speed to $0.85 \cdot V_{MAX}$ [kn] is allowed, provided a warning sign showing the maximum safe avoidance speed according to standard ISO 11592 is installed at the helm station.

The avoidance test is begun at lower speeds, which are increased until a feel for the craft behaviour as developed.

During the turn it shall be possible to control the direction of the craft. Dangerous instability or broaching tendencies shall not occur. The helmsman shall stay in position.

For slow craft ($V_{MAX} \leq 7 \cdot \sqrt{L_{WL}}$) the compliance may be estimated by observing the wake and comparing the turning radius with some known distance like the length of the craft. This procedure is called the simple method.

For high-speed craft ($V_{MAX} > 7 \cdot \sqrt{L_{WL}}$) the compliance shall be evaluated by measuring the turning radius for example with the aid of a track marked with buoys. At least three successful turns shall be made to both sides. This procedure is called the extended method.

### 29.5.5 Crash stop

The purpose of the crash stop is to determine the distance the craft needs to stop from full speed. This test is an alternative to the avoidance test in 30.5.4 for craft with a hull length of 8 m or larger. The maximum allowed stopping distance is the same as the turning radius requirement for craft with speeds below 30 knots according to Formula (31.1)

### 29.5.6 Going astern

The craft shall be able to go astern in a straight line, and turn to both sides. It is allowed to use thrusters or equal if required.

Going astern momentarily at 4 knots must not collect water in recesses or on deck affecting stability or water tightness in a dangerous way.

### 29.5.7 Emergency steering

The proper function of the emergency steering required in Chapter 20 shall be assessed by a practical test.

Conformity is shown if the craft can be steered in a fairly straight line while the speed is at least 4 knots.

# 30 ACCESSIBILITY AND MAINTENANCE

## 30.1 Objective

The objective of the rules in this chapter is to ensure that:

- Systems and equipment essential for the safe operation of the craft are accessible and operable
- Routine maintenance can be carried out without impairing the structure of the craft.

NOTE! Additional requirements may be given for special mission related to class

## 30.2 References

In this chapter reference is made to the following documents:

- ISO 10088 Permanently installed fuel systems
- ISO 15083 Bilge pumping

## 30.3 Documentation

For the verification of the requirements in this chapter no specific documents are required.

## 30.4 Definitions

"*Accessible*" means

Capable of being reached for inspection, removal or maintenance without the removal of permanent structures.

*"Readily accessible"* means

Capable of being reached for operation, inspection or maintenance without the use of tools or removal of any structure or any item of portable equipment.

*"Without impairing the weather tightness"* means one of the following, as applicable:

- In fully enclosed craft (see Chapter 2) the item in question shall be accessible by a person entering through a hatchway of limited size, classified as being "occasionally open at sea" (definition, Chapter 3) from the weather deck (definition, Chapter 2) or from inside a weather tight superstructure or deckhouse.
- Alternatively, in fully enclosed craft, the item in question shall be accessible through suitable openings, which, by virtue of their small size, are regarded as "service openings" (definition, Chapter 3) from outside the space in which it is located.
- Alternatively, in fully enclosed craft, the system and/or equipment in question may be remotely controlled.
- In partially decked and open craft, no requirements are given in this respect.

## 30.5 Requirements for accessibility and maintenance

Systems and equipment essential for the safe operation of the craft shall be capable of being accessed.

Especially critical systems that are prone to failure at sea are required to be readily accessible.

When located inside the weather tight envelope of a fully enclosed craft, and at the same time regarded as particularly critical, some of the systems and equipment are, in addition, required to be accessible without impairing the weather tightness. A summary of the requirements for the accessibility and maintenance of systems and equipment is presented in Table 1. The requirements are clarified as needed in clause 4.2.

Table 1. Summary of requirements for accessibility and maintenance of systems and equipment.

| Object | Accessibility | | | Viite |
|---|---|---|---|---|
| | Accessible | Readily accessible | Without impairing the weathertightness | |
| Doors and hatchways | | x | | 31.6.1 |
| Anchoring equipment | | x | | 31.6.2 |
| Mooring points and equipment | | x | | |
| Lifesaving equipment (lifewests, rafts, fire extinguishers) | | x | | |
| Fuel filters | | x | x 1) | 31.6.3 |
| Fuel fill, vent and distribution lines | x | | | |
| Sea water filters | | x | x 1) | 31.6.3 |
| Sea water pump | | x | x 1) | 31.6.3 |
| Seacocks | | x | x 1) | 31.6.4 |
| Bilge pump strainers | x2) | x | x 1) | 31.6.4 |
| Bilge pump lines | x | | | |
| Steering gear | x | | | 31.6.5 |
| Emergency steering gear | | x | | 31.6.6 |
| Propeller shaft seals | x | | | |
| Hydraulic systems | x | | | |
| DC main systems | | x | x 1) | 31.6.7 |

1) Only for craft of design category A

2) For strainers located in weather tight spaces not prone to collect litter or oil

## 30.6 Clarification of some of the requirements

### 30.6.1 Doorways and hatchways

Doorways and hatchways leading into the interior, including emergency exits and routes (see Chapter 28), shall be Readily accessible and operable regardless of possible deck cargo.

### 30.6.2 Anchoring equipment

Anchoring equipment, including chains and warps, shall be Readily accessible at all times. This also means that the routes from the steering positions to the anchoring equipment can be used safely regardless of possible deck cargo.

### 30.6.3 Engine systems

The following systems on the main engine(s) shall be Readily accessible without impairing the weather tightness of the craft.

- Fuel filters
- Sea water pump impeller
- Sea water filters

### 30.6.4 Shut-off valves for seacocks

All shut-off valves for seacocks shall be readily accessible. In addition, in design category A only, seacocks located below a level 100 mm above the water line in maximum load condition shall be accessible without impairing the weather tightness of the craft.

### 30.6.5 Steering gear

The following components of the steering gear shall be accessible for maintenance:

- The hydraulic pump unit;
- The piston unit;
- All valves and joints.

### 30.6.6 Emergency steering

The arrangements for emergency steering (see Chapter 20) shall be readily accessible. In fully enclosed craft the emergency steering system shall be capable of being operated without impairing the weather tightness of the craft.

### 30.6.7 Electrical systems

On DC systems the following items shall be readily accessible:

- The battery banks
- Main switches
- Switch boards
- Chargers
- Residual current devices
- Main fuses
- Fuses for consumer circuits.

# 31 PREVENTION OF POLLUTION AND NOISE

## 31.1 Objective

The objective of the rules in this chapter is to establish the limits to interior noise in craft and to airborne pass-by noise emitted by craft. In addition, the requirements for handling toilet waste is given in this chapter. Further, requirements for handling oil-contamined bilge water is included.

### References

This chapter refers to the following documents:

- ISO 11201:2010 Acoustics – Noise emitted by machinery and equipment - Determination of emission sound pressure levels at a work station and at other specified positions in an essentially free field over a reflecting plane with negligible environmental corrections
- ISO 2923:1996 Acoustics – Measurement of noise on board vessels
- ISO 14509-1: 2008 Small craft - Measurement of airborne sound emitted by powered recreational craft - Part 1: Pass-by measurement procedures
- ISO 8099 Small craft – Toilet waste retention systems
- IEC 61672-1: 2013 Electroacoustic – Sound level meters – Part 1: Specifications
- IEC 60942: 2003 Electroacoustic – Sound calibrators
- ISO 8099: 2000 Small craft – Toilet waste retention systems

## 31.2 Noise on board the craft

This section defines the conditions in and methods by which the ambient noise level is measured in the cockpits of work boats, and the normally allowable level of noise. Measurements must be taken at the position of the driver and also at the position of the assistant driver, when applicable. The same methods may also be applied to other work positions, including monitoring rooms, pantries and workshops. In the following, operator means the driver, navigator or other person working at his or her position.

### 31.2.1 Test method

The measurement instrument system must comply with the requirements for Class 1 measurement instruments in the standard IEC 61672-1. The measurements must be made using an integrating time-average sound level meter that meets the requirements of the standard IEC 60651. Microphones must be calibrated with a calibrator that meets the requirements of the standard IEC 60942. A windscreen must be used on microphones but its effect on the A-weighted acoustic pressure level may not exceed 0.5 dB in windless conditions.

The circumstances in which the craft is used must be as follows:

- acoustic pressure levels must be measured both at full load and light load;

- the speed of the craft must be that attained at full throttle in both load configurations; propulsion machinery must be running at least 95% of the maximum continuous rating (MCR);
- all auxiliary engines and equipment that may be running simultaneously in normal conditions must run for the entire duration of the measurement;
- doors and windows must be closed, unless they are kept open in normal use;
- weather conditions must be reported; they must be such that they do not influence the measurement; and
- if further definition of the circumstances of use is needed, they must comply with standard ISO 2923.

The equivalent continuous A-weighted acoustic pressure must be measured with a microphone placed 0.20 m ± 0.02 m from the side of the operator's head as defined in ISO 2923, Chapter XX. The operator must be standing or sitting in his or her normal working position. Measurements must be taken from both sides of the operator's head and the higher A-weighted acoustic pressure figure LpA will be recorded.

### 31.2.2 Test report

The following data must be reported:

identifying data of the craft and its main and auxiliary engines

the craft's loading configurations and corresponding attained speeds;

the measurement area and weather conditions during the measurements;

the measurement instruments; and

the equivalent A-weighted pressure level at the locations described in the previous chapter.

### 31.2.3 Allowable LpA values

Unless otherwise is determined for the craft type in question, the $L_{pA}$ value may not exceed 80 dB(A) in the case of a closed space or 85 dB(A) in the case of an open space in the locations defined under item 32.3.1.

## 31.3 Pass-by noise

### 31.3.1 Objective

For a commercial craft to meet the requirements of the EU recreational craft directive, the airborne noise pass-by emission of the craft must be determined. The noise emission shall be measured in compliance with the standard ISO 14509 as a maximum of the AS-weighted acoustic pressure level. The principal sections of measurement are presented in the following; for details, see the standard ISO 14509.

Measurements are not required in the case of outboard or inboard engine installations if the engines in question have a fixed exhaust manifold and have been type-tested to meet the requirements of the directive. In addition, measurements are not needed if all of the following terms are met:

- the engines have been installed as instructed by the engine manufacturer; and
- the exhaust manifold includes a silencer or silencers that comply with the instructions of the engine manufacturer.
- Froude number does not exceed the value 1.1 $Fn = \frac{V_{MAX}}{\sqrt{g \cdot L_{WL}}} \leq 1{,}1$
- Power-displacement ratio P/Δ, where P = the rated power of the engine under the standard ISO 8665 [kW] and Δ = loaded displacement mass [ton] does not exceed the value 40 kW/ton.

In other cases, measurements must be conducted in compliance with the following section.

### 31.3.2 Test method

Pass-by noise is measured on both sides of the craft, normally at a distance of 25 m. The measurement instruments must meet the Class 1 instrument requirements presented in the standard IEC 61672-1. The measurements must be made using an integrating time-average sound level meter that meets the requirements of the standard IEC 60651. Microphones must be calibrated with a calibrator that meets the requirements of the standard IEC 60942. A windscreen must be used on microphones but its effect on the A-weighted acoustic pressure level may not exceed 0.5 dB in windless conditions.

The weather conditions, circumstances of use, test track and microphone locations must comply with the standard ISO 14509. The maximum AS-weighted acoustic pressure level during pass-by must be measured. At least two pass-byes must be made for both sides of the craft. The result for both sides is the average of the first two measurement results that are within 1 dB of each other. The maximum AS-weighted acoustic pressure level $L_{pASmax}$ to be recorded is the value for the higher-noise side of the craft.

### 31.3.3 Allowable acoustic pressure levels $L_{pASmax}$ values

The acoustic pressure level $L_{pASmax}$ may not exceed 75 dB when the craft has a single propulsion engine installed or 78 dB when the craft has two or more propulsion engines.

## 31.4 Toilet waste

### 31.4.1 General

If the craft is required to have a toilet, it must have a holding tank equipped with both a pipe going through the bottom and a deck fitting for suction drainage. As an alternative, a chemical toilet may be fitted, with a tank of at least 15 litres, which can be taken ashore for discharge.

### 31.4.2 Installation of a holding tank for waste water

Waste water holding tanks must be separate and firmly fixed. The minimum capacity of a holding tank is 30 litres. The filling ratio of the tank must be discernible at least when it is ¾ full.

The installation must comply with the standard ISO 8099. The integrity of the system must be verified with tests. When installed, the tank and the pipes, hoses and fittings associated with the system must withstand 20 kPa pressure for a period of 5 minutes without leakage. In addition, the tank must withstand 20 kPa of negative pressure without sustaining permanent deformation. The system must have a means of venting vapours to the outside of the craft.

### 31.4.3 Hull penetrations

Hull penetrations must have a shut-off valve that can be sealed shut.

### 31.4.4 Deck fittings for suction drainage

Deck fittings for suction drainage must be placed where they are easily accessible and identified with a marking on the fitting or in its vicinity. The minimum diameter of the fitting is 38 mm.

## 31.5 Prevention of fuel or lubrication oil leakage

### 31.5.1 General

The craft must be so constructed that discharge of pollutants (oil, fuel, etc.) overboard is prevented. In particular, there shall be a fixed arrangement to collect oil and fuel spill from the engine.

### 31.5.2 Alternatives for arranging bilge water removal from the engine room

- The part of the bilge underneath the engine(s) is separated from the rest of the bilge in order to facilitate collection and removal of contamined water. Automatic bilge pumps must not be used from such a compartment. A manual bilge pump shall discharge in a dedicated bilge water tank.
- An automatic bilge pump equipped with an oil separator or bilge water filter. Manual bilge pumps shall discharge in a dedicated bilge water tank or be equipped with oil separator or bilge water filter.
- The engine room bilge is possible to drain with a pump into a fixed or portable container. Automatic bilge pumps are equipped with an oil separator or bilge water filter.

The oil separators and bilge water filters must have at least the same capacity as the connected pump.

# 32 ADDITIONAL NOTATION “TRANSPORT OF CARGO”

## 32.1 Objective

In this chapter requirements are given for cargo handling and carrying.

NOTE! Additional requirements on lifting gear are given in Chapter 41!

## 32.2 Additional notation “Transport of cargo”

The requirements in this chapter is valid for craft where the amount of cargo see Clause 4.5.3, exceeds the value given by formula 33.1:

$$m_{CARGO}=(2,5\cdot L_{WL}\cdot B_{WL})^{1,5}\ \text{kg} \qquad (33.1)$$

If the craft meets the requirements in this chapter, it will be granted the additional notation “Transport of Cargo”.

## 32.3 Documentation

To verify that the requirements presented in this chapter are met, the following documentation is required:

- Cargo deck layout;
- Stability calculations taking into account the effect of shifting deck cargo.

## 32.4 Requirements

### 32.4.1 General arrangement

The arrangement of decks shall be such that the intended amount and type of cargo can be safely handled and carried in conditions corresponding to the intended design category. It shall be possible to carry the cargo in such a way that:

- The trim of the vessel is such that water coming onboard will not accumulate on any part of the deck
- The cargo will not block the drainage ports
- The visibility requirements in Chapter 30 are met
- The critical locations according to Chapter 32 and the functions of the vessel are accessible/operable, such as engine room, emergency steering, anchoring, mooring and towing equipment, fire-fighting equipment and life-saving appliances.

### 32.4.2 Load line mark

A craft with the additional notation "Transport of Cargo" shall have a load line mark on both sides amidships. The load line mark shall be according to Figure 1. The upper edge of the mark shall correspond to the draught in fully loaded condition in fresh water.

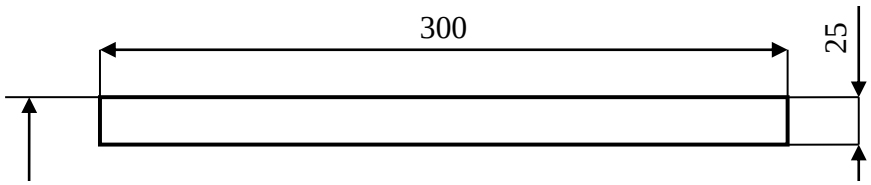


Draught in fresh water corresponding to “maximum load, departure” condition

Figure 33.1.

### 32.4.3 Load distribution

The load distribution assumed in the calculation of freeboard and stability shall be realistic and in accordance with the principles in paragraph 33.4.1. When the type of cargo is unknown, a specific gravity of 1 t/m3 shall be assumed, and, further, that the cargo is evenly distributed on the cargo deck(s). The vertical centre of gravity of the cargo shall not be taken less than 0,3 m above the deck, unless a limitation is given.

### 32.4.4 Lashing of cargo

There shall be provision for lashing on decks intended for cargo.

### 32.4.5 Stability with shifting deck cargo

In the stability assessment according to Chapter 4 it shall be assumed that the athwart ship shift of the total amount of cargo on deck is $B_{CD}/4$, where $B_{CD}$ is the width of the cargo deck in question. If the deck arrangement prevents a shift of this magnitude, a smaller shift may be permitted.

### 32.4.6 Stability with other types of cargo

The effect of shifting of dry cargo carried in holds, and bulk and liquid cargoes are considered on the basis of the possible potential heeling moment.

Deck cranes, other onboard lifting gear and winches.

Craft fitted with a deck crane shall meet the requirements in Chapter 40. Other onboard lifting gear and winches are assessed on basis on their effect on stability and possible other risks they pose.

# 33 ADDITIONAL NOTATION "PASSENGER TRANSPORT"

## 33.1 Objective

The objective of the rules in this chapter is to define additional requirements corresponding to the risks encountered by commercial craft transporting more than 12 passengers.

## 33.2 Additional Notation *"Passenger Transport"*

The Additional Notation *"Passenger Transport"* can be granted for commercial craft transporting more than 12 passengers, which are not part of the crew.

## 33.3 References

In this chapter reference is made to the following documents:

- Passenger Ships Directive 2009/45/EC
- ISO 15085:2003+A1:2009 Small craft – Man-overboard prevention and recovery
- ISO 8099:2000 Small craft- Toilet waste retention systems
- HSC Code – Chapter 7

## 33.4 Documentation

For assessment of the requirements given in this chapter the following documentation is required:

- Passenger ship safety information "Safety Plan";
- Certificates for fire resistant materials as required; and
- Drawings and reports showing compliance with the requirements in items 34.6…34.16

### 33.4.1 Scope of application

Within the scope are commercial craft built according to these rules and engaged in domestic transport of passengers. It should be noted, that craft within the scope of the Directive 2009/45/EY are not included.

## 33.5 General requirements

Craft with the Additional Notation "Passenger Transport" shall in addition to meeting the requirements in the Chapters 1…32 in these rules also meet the requirements in this Chapter.

## 33.6 Stability

The craft shall meet the stability requirements for the applied assessment option in Chapter 4, assuming that the centre of gravity for standing persons is 1 m above the deck, and for a sitting person 0.3 m above the seat level. The weight of a person shall be taken as 75 kg in all assessments.

Passenger craft may heel maximally 12 degrees when persons of 75 kg weight are located near the deck edge according to the offset-load test in standard ISO 12217-1, considering the person centre of gravity given in item 34.6. The requirement shall be met with any number of persons right up to the maximum number. The freeboard during the offset-load test shall be at least 0.014· $L_H$ and always over 200 mm measured to the lowest down flooding opening.

Open craft are allowed only in Design Category D.

The craft limit of positive stability shall normally be at least 50 degrees. In cases where the GZ-curve area between 30 and 40 degrees is at least 0.03 meter-radians, a limit of positive stability of at least 40 degrees may be allowed.

### 33.7 Subdivision and water draining arrangements

The craft shall meet the requirements at least for *limited unsinkability* in Chapter 6 item 6.6.

In Design Categories A and B *one compartment damage stability* according to Chapter 38 is required.

The bilge pumping arrangement output and function shall always be tested according to Chapter 6 separately for each compartment.

In each compartment, except for the small spaces in Chapter 6 item 6.7.2, there shall be a reserve pumping out system which can be controlled outside the pumped out space.

### 33.8 Fire safety

The fire hazard areas shall be separated according to Chapter 27 item 27.6.2 from enclosed passenger- and crew areas and from their passages.

In crew- and passenger spaces and their passages the surfaces shall be of low flame-spread type according to Chapter 27 item 27.4.6.

The craft shall have a fire detection system able to determine the compartment where the fire is.

The fire alarm shall also detect smoke.

### 33.9 Personal safety

Falling over board shall be prevented according to Chapter 26 with the following additions:

All craft shall be fitted with rails, except for craft with air-filled pontoons in Design Category C and D, where the passengers shall be within the helmsman’s field of view, and be seated on saddle seats with front-mounted handholds for both hands.

The rail and its gate, intended to prevent persons from falling over board, or over an upper edge, shall not be removable.

The rail and its gate shall be at least 1000 mm high, and a sphere with 110 mm diameter must not fit through it anywhere from the deck up to 700 mm height.

The rails intended to prevent people from falling over board shall be fitted with at least 25 mm high

foot-stops except for where there are gangway gates and passages.

The craft shall be equipped with an arrangement enabling safe disembarking, for example a gangway integrated in the rail.

The gates/gangways shall be arranged so passengers cannot open them accidentally while in the passenger areas without the crew taking notice.

Stairs shall have uniform rise and tread, run in the craft longitudinal direction, and have handrails both sides.

In case the dynamic load factor for the fully loaded craft exceeds calculated according to Chapter 7 item 7.4, there shall be arrangements for reducing the passenger seat vertical accelerations for example with saddle or spring suspended seats.

### 33.10 Passenger spaces and escapeways

The width of seats shall be at least 0.5 m. The height above the back edge of seats shall be at least 0.9 m. Footwell depth shall be at least 0.75 m measured from the seat backrest.

In the passenger spaces there shall be the same number of seats as the maximum number of persons for the craft. Temporary arrangements or assemblies shall not be counted as seats.

An escapeway located high up shall have permanent a ladder in case its opening is over 1 m above the floor in the evacuated space.

It shall be easy for the passengers to move from the pier to the passenger spaces, and vice versa. The stairs and doors shall be at least 0.75 m wide.

Escapeways, except for stairs and doors, shall be at least 0.8 m wide, including the escapeways for transverse rows of more than four grouped seats.

The area of an escapeway opening shall be at least 0.25 m2, arranged so a sphere with 0.5 m diameter fits through.

The headroom in passenger spaces and their passages shall be at least 1.98 m. In other crew spaces 1.80 m is required.

The smaller of the heights may be accepted in doors and escapeways, and above seats.

The escapeways shall be illuminated and marked with photoluminescent signs according to SFS-ISO 7010 so the passengers can indentify all escapeways, and find the way out.

Escapeways leading to an emergency exit not normally in use, shall be marked with a photoluminescent sign EMERGENCY EXIT.

In crew- and passenger spaces, and deck lounges there shall be illumination and emergency lighting.

The free deck area shall be sufficient for evacuating the craft maximum number of persons from the interior spaces in Design Category A and B.

### 33.11 Accommodation

In craft with enclosed passenger spaces there shall be at least one toilet, for over 50 passengers at least two toilets.

Spaces closed from the inside shall in an emergency be openable from the outside without breaking anything.

### 33.12 Electrical system

The craft shall have a reserve source of electricity located above the waterline and outside the engine space, able to power the following functions simultaneously for at least three hours without charging:

- Emergency lighting
- Navigation lights
- VHF radio (50 % transmitting, 50 % receiving)
- Navigation electronics
- Alarm- and fire detection systems
- Signalling equipment (at least 20 % use)
- Bilge pumps in engine space

Additionally, the craft shall have an emergency source of electricity powering solely the GMDSS-system

radio equipment according to Chapter 24. Detailed requirements are given in TraFi regulation Radio Equipment for Ships (TraFi/5379).

The craft shall have two main sources of electricity.

For Design Category A and B having enclosed crew- and passenger spaces, the electrical cables shall be halogen-free.

### 33.13 Propulsion machinery

There shall be an emergency stop for the craft propulsion machinery at the helm station.

### 33.14 Fuel system

Fuel with a flashpoint below 60°C (for example petrol) is allowed only for outboard engine installations when the helm station and passenger spaces are entirely in the open.

In tank spaces for fuels with a flashpoint below 60°C, only ignition protected components are allowed for tank level transmitters and ventilation of the space.

For inboard engine installations only fuel with a flashpoint over 60°C is allowed (for example diesel oil).

Fuel or flammable oils shall not be carried forward of the collision bulkhead.

### 33.15 Prevention of pollution and noise

The craft shall meet the requirements for pass-by noise according to Chapter 32 item 32.4.

Enclosed helming and passenger spaces shall meet the requirements for noise on board craft in Chapter 32 item 32.3

Toilets, waste retention, and pump-out systems shall be installed according to standard ISO 8099.

# 34 ADDITIONAL NOTATION TOWING

## 34.1 Objective

The objective of this chapter is to define additional requirements for craft engaged in towing operations.

A tugboat is a craft designed for the towing of other craft, log rafts, or other floating objects using a towing hawser, and for this purpose is equipped with a towing hook, winch, bollards or corresponding equipment.

Craft with propulsion power less than 150 kW is not considered a tugboat.

## 34.2 Additional Notation ”Towing”

Craft meeting the requirements in this chapter will be assigned the Additional Notation ”Towing”.

## 34.3 Documentation

For assessment of the requirements given in this chapter the following documentation is required:

- A stability calculation according to Chapter 4, where the heeling moment caused by towing is considered; and
- Documentation showing that the towing hawser can be cast off at full load.

## 34.4 Stability requirements

The stability for tugboats is assessed by plotting the righting and heeling moment curves calculated in the most unfavourable loading condition according to Chapter 4 into the same diagram. Then the area formed above the heeling moment curve between the righting and heeling moment curves shall be at least 0.01 metreradians when calculated up to 40° heeling angle.

## 34.5 Heeling moment

The heeling moment lever k [m] is calculated according to Formula (34.1)

$$k = 0{,}07 \cdot C \cdot T \cdot \frac{h \cdot \cos f\phi - 0{,}8 \cdot r \sin f + 0{,}5 \cdot d}{\Delta} \text{ [m]} \qquad (34.1)$$

where

C = 4 · l / $L_{WL}$, max 1.0*
D = mean draught, [m]
h = the towing point height above the waterline, [m]
ϕ = heel angle, [degrees]
l = the horizontal distance from the towing point to the aft perpendicular, [m]
T = the static bollard pull, [kN]
R = towing hook radial support radius, [m]. If the radius varies the distance to be used is taken from the hook point of application to the centerline with the pull straight to the side.

For tugboats towing craft which are using their own propulsion engines, or working together with other tugboats, the stability shall be assessed in relation to the pulling power developed by the other craft.

## 34.6 Special requirements

### 34.6.1 Towing hawser

It shall be possible to cast off the towing hawser quickly under full load.

The towing hook and hawser hauling-in system shall be dimensioned using the craft maximum bollard pull, with a safety factor of 5 in relation to the breaking load of the used materials.

### 34.6.2 Visibility from the helm station

From the helm station there shall be an unobstructed view of the towing hook and towing winch.

# 35 ADDITIONAL NOTATION "OIL SPILL COMBAT"

## 35.1 Objective

The objective of this chapter is to define additional requirements for craft engaged in oli spill combat operations, corresponding to the risks these craft are exposed to. Particularly the toxic and flammable components in crude oil requires a higher safety level. However, craft which operate continuously in an environment containing high concentrations of explosive or toxic gases, are outside the scope of these rules.

## 35.2 Additional Notation "Oil Spill Combat"

Craft meeting the requirements in this chapter will be assigned the Additional Notation *"Oil Spill Combat".*

## 35.3 References

In this chapter reference is made to the following documents:

- Germanischer Lloyd: MSA Code of practice for vessels engaged in oil recovery operations
- ISO 28846:1993 Small craft – Electrical devices – Protection against ignition of surrounding flammable gases
- IEE regulations for the electrical and electronic equipment of ships with recommended practice for their implementation, 6th edition, 1990

## 35.4 Documentation

For assessment of the requirements given in this chapter the following documentation is required:

- General arrangement drawing with unsafe and safe areas marked; and
- Drawings and documents showing that the requirements in items 36.5...36.13 are met.

## 35.5 Scope of application

These rules are applied to craft built to handle, store, and transport oil in connection with an oil spill, i.e. either collecting the oil floating on the water surface, or acting generally in oil recovery.

The rules in this chapter are specifically aimed at larger craft (LH > 15 m), but they may where necessary be applied also to smaller craft.

The scope of application for these rules are limited to oil recovery operations where there are no highly explosive gases. This is considered to be the situation when the flashpoint in the oil spill area is at least 60°C (closed cup test).

## 35.6 Unsafe and safe areas

### 35.6.1 Unsafe areas

Unsafe areas are such areas where highly explosive or flammable gases tend to collect. These are:

- Storage tanks for recovered oil;
- Cargo pump spaces;
- Cofferdams and spaces adjacent to the storage tanks for recovered oil;
- Open spaces on deck, where recovered oil may flow;
- Spaces on deck within 3 m from an opening leading into a space on deck;
- Spaces on deck within 3 m from vent openings or hatches from tanks, pump spaces and cofferdams;
- Closed or half open spaces containing cargo piping
- Spaces not having positive pressure ventilation, with direct access from an unsafe area, or having openings to an unsafe area; and
- Any area outside the craft where there is oil pollution (i.e. oil on the water surface).

### 35.6.2 Safe areas

The areas not mentioned above are considered to be safe in these rules.

## 35.7 External surface materials

All external surfaces shall be of a non-combustible material, such as steel or aluminium.

## 35.8 Isolation of unsafe and safe areas

Unsafe and safe areas shall be isolated from each other as far as possible.

## 35.9 Storage tanks for recovered oil

### 35.9.1 Arrangement

In case recovered oil will be stored on board the craft, there shall be storage tanks designed for this purpose. The storage tanks for recovered oil shall not be in machinery or accommodation spaces. The tanks shall be isolated from the mentioned spaces by cofferdams, tanks for other purposes, or other dry spaces than accommodation.

### 35.9.2 Tank openings

All openings to these tanks (fill- and vent line, sounding tube, hatches, etc.) shall be on the open deck.

### 35.9.3 Tank vents

Tank vent openings shall be located at least 5 m from openings to accommodation or engine spaces, and from uncertified electrical equipment. The tank vent openings shall have flame arrestors.

### 35.9.4 Pumping systems

The recovered oil shall be handled with a pumping and piping system installed for this purpose.

## 35.10 Engine installation

### 35.10.1 Arrangements

Diesel engines including their exhausts, or other equipment which may cause ignition hazards, shall not be installed in unsafe areas.

### 35.10.2 Cooling system

The propulsion engine cooling system shall be designed for working in oil contaminated water. This can be achieved for example with skin tank cooling, or a scoop system reaching through the oil layer into clean water. In case skin tank cooling is used, particular attention shall be paid to the reduced heat transfer caused by the oil layer. A scoop system shall be sufficiently protected against hitting floating objects.

### 35.10.3 Exhaust systems

Exits of dry exhaust systems shall be fitted with flame arrestors.

## 35.11 Ventilation of accommodation spaces

The unsafe and safe areas shall be separated from each other. Ventilation intakes shall be in the safe areas.

At least one entrance to the accommodation to be in the safe area. Doors and other access openings between safe and unsafe areas shall be kept closed during oil recovery operations.

## 35.12 Gas detection system

All craft denoted Oil Spill Combat according to these rules, shall have at least one portable device for the detection of explosive gases.

## 35.13 Electrical equipment

### 35.13.1 Certified equipment

Electrical equipment located in unsafe areas shall primarily meet the requirements in IEE regulations for the electrical and electronic equipment of ships with recommended practice for their implementation,

6th edition, 1990, including additions. Alternatively, CE-marked equipment may be used, meeting the requirements in standard ISO 8846 Electrical devices – Protection against ignition of surrounding flammable gases. Electrical bilge pumps shall meet the standard ISO 8849 Electrically operated bilge pumps

### 35.13.2 Uncertified electrical equipment

It shall be possible to disconnect such electrical equipment located in the unsafe areas from controls in the safe areas during oil recovery operations. None of these shall be:

- Navigation lights;
- Bilge pumps; and
- Other equipment necessary for the safe operation of the craft.

### 35.13.3 Oil recovery equipment

The electrical supply to oil recovery equipment shall if possible be permanently installed. Both permanently installed and removable oil recovery and pumping equipment as well as separate power sources shall meet the requirements for machinery and electrical equipment as far as applicable.

# 36 ADDITIONAL NOTATION “SELF-RIGHTING”

## 36.1 Objective

In this chapter additional requirements are given for craft required to be self-righting after turning fully upside down. The following risks are addressed:

- The craft shall self-righting without any additional actions from any heeling angle.
- The propulsion machinery and its systems shall be able to operate after the craft righted itself.
- Heavy equipment and objects on board shall not move a dangerous amount during the turning.

## 36.2 Additional Notation ”Self-righting”

Craft meeting the requirements in this chapter will be assigned the Additional Notation ”Self-righting”

## 36.3 Documentation

For assessment of the requirements given in this chapter the following documentation is required:

- Stability calculation (see Chapter 4) considering the requirements in item 37.4;
- A declaration from the propulsion engine manufacturer that the engine can stand turning upside down without damage;
- A declaration of the heavy objects on board, and their attachment.

## 36.4 Stability

The righting lever shall be positive for all heeling angles from -180...180°. This requirement shall be met

in all appropriate loading conditions, at least loading conditions LC1, LC2, and LC3 see Chapter 4.

## 36.5 Propulsion engine and its systems

In case the propulsion engine cannot work in upside down position, there shall be a system stopping the engine automatically if the craft capsizes.

The ingress of water shall be prevented to the extent that it does not endanger the stability of the craft, or the function of the equipment. In addition to the requirements in Chapter 3 the openings always open during operation, such as engine air intake and ventilation, shall be fitted with automatic closing appliances.

## 36.6 Strength of superstructures

In addition to the scantling pressures given in Chapter 7, the condition when the craft is upside down and the superstructures under water shall be considered. The superstructures shall be dimensioned according to Chapter 10,14, or 18, depending on the building material, for the largest hydrostatic pressure that occurs at the point under consideration when the craft heels from -180...180°. The pressure shall be determined for each case with the help of the stability calculations.

### 36.7 Heavy equipment and objects

When the craft heels from -180...180° all equipment and objects shall remain in place. For all objects weighing more than 10 kgs there shall be proper attachments or equal.

### 36.8 Seating

The seating arrangements shall consider that the craft may turn upside down. The seats shall be fitted with safety belts.

### 36.9 Operational capability after capsizing and returning to upright

The craft shall after a capsize be fully operational, except for possibly damaged antennas and other sensitive external equipment.

# 37 ADDITIONAL NOTATION "ONE COMPARTMENT DAMAGE STABILITY"

## 37.1 Objective

The objective of this chapter is to ensure that the craft can endure that one watertight compartment is flooded without capsizing and/or sinking.

## 37.2 Additional Notation "One compartment damage stability"

Craft meeting the requirements in this chapter are assigned the Additional Notation "One compartment damage stability".

## 37.3 References

In this chapter reference is made to the following document:

- SOLAS Consolidated Edition 2014

## 37.4 Documentation

For assessment of the requirements given in this chapter the following documentation is required:

- Drawings showing the following:
  - The watertight subdivision;
  - The structure for watertight bulkheads including WT doors and penetrations;
  - The location of openings leading to watertight compartments, their closing arrangements;
  - Other possible flooding control arrangements;
- Damage stability calculations showing the following:
  - A description of the watertight hull used in the calculations;
  - The lightweight and centre of gravity position;
  - Loading cases (usually the same loading cases as in the stability calculations for the undamaged craft)
  - A description of the damaged conditions;
  - Stability and equilibrium flotation positions after the damage for all loading/damage conditions;
  - Comparison of calculated results with the criteria.

## 37.5 Definitions

## 37.6 General

The term ”One compartment damage stability” means that the watertight subdivision of the craft is such that the craft can endure that one watertight compartment is flooded without capsizing or sinking, and the flooding does not proceed to other compartments.

## 37.7 Compartment

A space limited by watertight bulkheads, its length exceeds the minimum length of damage 0.1·LWL.

## 37.8 Bulkhead deck

The bulkhead deck is the uppermost deck, or other watertight surface, to which the bulkheads extend.

## 37.9 Margin line

The margin line is a (theoretical) line along the craft topside 76 mm below the upper surface of the bulkhead deck.

## 37.10 Space permeability

The permeability means how big a part of the compartment volume can be filled with water. Note that the volume of the space is calculated as a moulded volume up to the margin line. Normally the numbers in Table 38.2 are used, but if so desired, the permeability used in the damage stability calculations may also be determined based on the volume of the water displacing items in the space.

### 37.10.1 Watertight doors and hatches

For the watertight doors and hatches there shall be documentation stating their watertightness. Doors shall be openable and closeable from both sides. Prototypes for doors or hatches shall be tested using a water pressure which can occur when the compartment in question, or the adjacent ones, have filled with water. The closing device shall stand the relevant hydrostatic pressure from both sides.

### 37.10.2 Initial condition

The craft loading condition before the damage. The initial conditions to be assessed are mentioned in Chapter 4. Note that for craft with the Additional Notation ”Ice reinforcement” the icing on decks and superstructures shall be considered according to Chapter 4 item 4.7.4.

### 37.10.3 Damage condition

A condition where part of the craft watertight compartments are damaged.

## 37.11 Assumptions for the craft subdivision

The rules for one compartment damage stability are based on the following assumptions for the craft subdivision:

- The craft is divided into watertight compartments primarily with transverse bulkheads extending up to the bulkhead deck, thus preventing flooding from one compartment to another.
- The craft has a collision bulkhead, see Chapter 6.
- The watertight bulkheads are primarily straight, but if this is not the case, SOLAS Part B
- Chapter II-2 Regulation 7 gives advice for the determination of the extent of flooding.
- Unsymmetrical watertight compartments should better be avoided. In case heeling angle equalization is required using cross-flooding, the arrangement shall be such that no action from the crew is required. Otherwise the advice given in SOLAS Part B Chapter II-1 Regulation 8 for cross-flooding shall be applied.
- The number and size of openings in the watertight bulkheads shall be kept to a minimum.
- Bulkhead penetrations for electrical cables etc. shall be dimensioned for the hydrostatic pressures which can occur in the location in question. Watertight bulkhead penetrations for piping or similar, having open holes in both compartments are not allowed.
- Openings in the bulkhead deck, such as access stairs and hatches, shall be protected with weathertight closing appliances (at least Tightness Level 2 according to Chapter 3 item 3.9.3). In case such openings are located inside a weather tight superstructure, the opening does not need a closing appliance, unless the same superstructure also protects an opening leading to another compartment.

## 37.12 Extent of damage

### 37.12.1 Length of damage

When assessing the craft endurance after damage both side damage and bottom damage shall be considered.

The length of the damage shall be assumed to be 0.1·LWL. The damage is assumed to be limited to one watertight compartment, but in case the length of a compartment is less than 0.1·LWL, the damage shall be assumed to extend into the next compartment(s) towards the stern.

### 37.12.2 Bottom damage

The width of the damage for monohulls shall be the same as the beam of the craft, or a smaller width in case this causes a more dangerous damage condition. For catamarans the damage is assumed to affect only one hull.

The vertical extent of the damage shall be assumed to be 0.1·BH. For catamarans the width of the bridge can be deducted from the beam when determining the vertical extent.

Catamaran bridges are assumed to suffer damage only in case the part in question is below the fully loaded waterline when the craft is undamaged.

### 37.12.3 Side damage

The transverse extent of the side damage shall be assumed to be 0.2·BH measured from the side perpendicularly to the centreline at the fully loaded waterline. For catamarans the width of the bridge at waterline level can be deducted from the beam when determining the transverse extent. In the vertical direction the damage is assumed to extend upwards from the base line without limitation.

## 37.13 Permeability coefficients for damaged compartments

The permeability coefficients for damaged compartments shall be taken from Table 38.2, or determined by calculation. The coefficients are applied to both volumes and waterplane areas.

Table 38.2 The space permeability coefficients

| Space | Permeability coefficient |
|---|---|
| Cargo space or store | 60 |
| Accomodation | 95 |
| Engine space | 85 |
| Tanks | 0 tai 95 [1)] |
| Dry cargo space | 70 |
| Car transport space | 90 |
| Voids | 95 |

1) Whichever results in the worse result

## 37.14 Flotation equilibrium position after damage

In the flotation equilibrium position after the damage in calm water in any damage condition specified in item 38.7 and in all applicable loading conditions, the craft shall have sufficient reserve buoyancy and stability, so it meets the following requirements:

- The margin line shall be above water, except for the damaged compartment area, where the margin line may be submerged;
- The freeboard to openings without weather tight closing appliances, through which flooding may progress to undamaged compartments, shall be at least 150 mm;
- The freeboard to openings with weather tight closing appliances shall be positive in all undamaged compartments;
- The craft angle of heel and/or trim shall be at most 10°;
- At the life rafts the freeboard shall be positive;

- The essential life saving appliances, emergency radio equipment, sources of electricity and audible information systems, if any, needed for the evacuation control, shall be in working order.

## 37.15 Heeling moment

When determining the righting moment lever curve for assessment according to item 38.11 it shall be assumed, that the offset load moment, or wind induced moment, whichever is bigger, acts on the craft.

### 37.15.1 Offset load moment

This is the heeling moment arising when all people collect on one side. The heeling moment caused by the transfer of people shall be the same as in the evaluation of offset loads (see Chapter 4 item 4.12), but transfer of deck cargo need not be considered.

### 37.15.2 Wind induced moment

The wind induced moment shall be calculated in the same way as when assessing the craft stability with wind and waves on the beam in the undamaged condition (see Chapter 4 item 15).

### 37.15.3 Alternative to the use of the margin line

In case the craft watertight compartments are such that it is difficult to define the bulkhead deck, or that its use is not appropriate, the flotation equilibrium after flooding shall be assessed as follows: In the equilibrium flotation condition after flooding, the volume of the watertight hull above the waterline shall be at least according to Formula (38.1).

$$V_R = 0.5 \cdot L_H - 2.5 \text{ m}^3 \qquad (38.1)$$

The craft shall in other respects meet the requirements for the flotation position specified in the bulleted list in item 38.9.

## 37.16 Stability after the damage

The stability in the equilibrium flotation condition after flooding and possible cross-flooding, shall meet the following requirements:

- The stability range to be at least 15°;
- The maximum righting moment lever must not be smaller than 0.10 m;
- The area under the righting moment lever curve shall be at least 0.015 metreradians measured from the equilibrium angle to the smaller of the following heeling angles:
    - The heeling angle at which flooding to undamaged compartments occur; or
    - 22° measured from the upright position.

It shall be assumed in the assessment that the larger of the heeling moments in item 38.10.1 or 38.10.2 is affecting the craft.

# 38 ADDITIONAL NOTATION "ICE REINFORCEMENT"

## 38.1 Objective

The objective of the rules in this chapter is to ensure that hull and appendages have enough strength for craft navigating in restricted ice conditions. Further, some other requirements associated with winter navigation are considered. The rules do not address the craft performance in ice breaking tasks.

Here restricted ice conditions mean maximum 20 cm thick solid ice.

## 38.2 References

In this chapter reference is made to Finnish-Swedish Ice Class Rules

## 38.3 Symbols

h = ice thickness [mm]
α = waterline angle [degrees]
β0 = frame angle [degrees]
Pi = ice pressure [MPa]
F = the linear ice load per metre of contact area [kN/m]
F1m = the linear ice load per metre of contact area corrected for displacement [kN/m]
b = the panel shorter side [mm]
l = the panel longer side [mm]
s = frame spacing [mm]
lu = stiffener span [mm]
σD = design stress [MPa]
mLDC = displacement weight fully loaded [kg]

## 38.4 Documentation

For assessment of the requirements given in this chapter the following documentation is required:

- Drawing showing the geometry of the hull and underwater appendages (lines drawing);
- Drawings of the structure in the ice zone;
- Calculations of the ice pressure and the strength of the structure;
- Drawing of the propeller shaft line;
- Drawing of the rudder;
- Drawing of the cooling water system;
- Drawing of closing appliances in the ice zone;
- Drawing of the exhaust line arrangement.

## 38.5 Definitions

### 38.5.1 Ice conditions

The assessment of the craft ability to navigate in ice is performed for one of the following cases:

Structural level 1. Maximum 5 cm thick level ice;
Structural level 2. Maximum 10 cm thick level ice;
Structural level 3. Maximum 20 cm thick level ice;

### 38.5.2 Ice zone

The ice zone is the hull shell area extending aft from the point where the stem and fully loaded waterline cross, the ice thickness h above the fully loaded waterline, and h+100 mm below the light service waterline;

The ice zone further includes:

- From the stem and fully loaded waterline crossing point a 0.3· $L_{WL}$ long, and h+100 mm high area above the fully loaded waterline;
- For displacement craft the whole bottom in a 0.2· $L_{WL}$ long area aft of the fully loaded waterline forward end;
- For planning craft the whole bottom in a 0.6· $L_{WL}$ long area aft of the fully loaded waterline forward end, as well as the chine;
- The area below the fully loaded waterline down to the chine, and transom lower edge.

Butt welded ice reinforced shell plating seams shall not form angles below 135° in relation to the ice field in the transfer area.

The ice zone borders and shell plating bevelled transfer areas are shown in Figure 39.5.

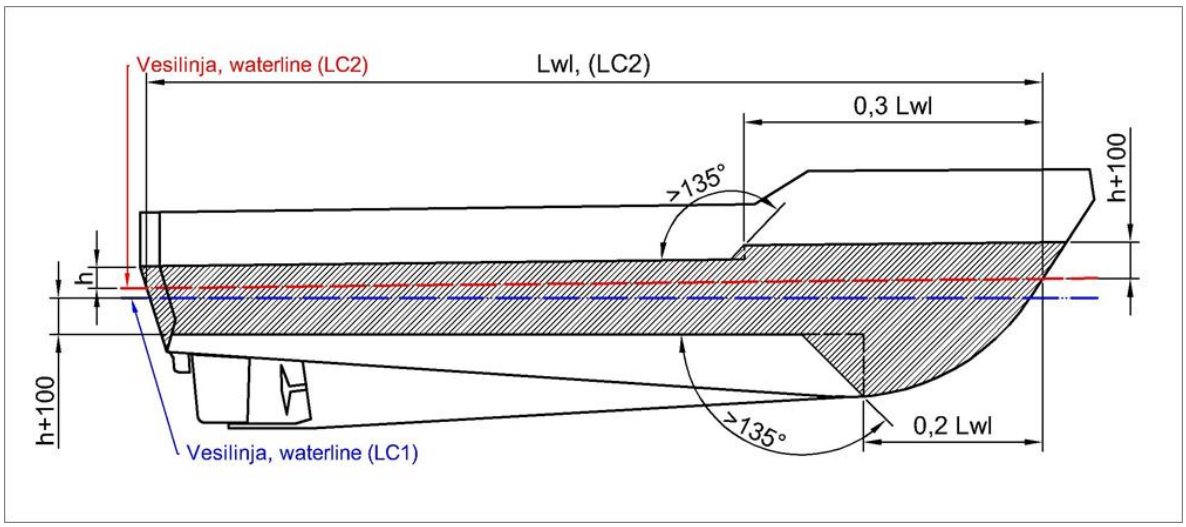


Figure 39.5 Ice zone borders for displacement craft

### 38.5.3 Ice frame

An ice frame is a stiffener in the ice zone, transferring the ice loads to ice stringers in transversely framed structures, or to web frames in longitudinally stiffened structures.

### 38.5.4 Ice stringer

An ice stringer is an approximately horizontal major stiffener at the lower and/or upper edges of the ice zone, its purpose is to support ice frames at their upper and/or lower ends.

## 38.6 Scope of application

### 38.6.1 Hull type

The craft is assumed to be a monohull designed for the displacement- or planning speed regime. Craft designed for maximum 5 cm ice may be of planning type.

### 38.6.2 Hull shape and appendages

The slope of the stem in the ice zone in relation to the horizontal plane shall be at most 60 degrees. For ensuring that the craft is able to go astern in ice the transom or sternpost angle shall equally be at most 60 degrees.

For ensuring the maneuvering properties for Structural level 3 craft the loaded waterline shall be narrower in its aftermost quarter length.

The underwater appendages shall stand ice blocks. Thruster tunnels and water intakes shall be protected by grids.

### 38.6.3 Propulsion and cooling system

The propulsion for craft with Structural level 2 or 3 shall be an open propeller arrangement meeting the requirements in item 39.8.7 and 39.8.9. For craft with Structural level 1 waterjet propulsion is allowed.

For Structural level 1 two through hulls with grids and their own raw water filters are approved for cooling water intakes below the ice zone. For Structural level 2 and 3 there shall be closed circuit skin tanks, or a raw water chest to which also the outlet water is led. Raw water filters shall be installed so the crushed ice can be removed from one filter at a time while the engine is running.

### 38.6.4 Navigation speed

The craft speed in ice fields is limited to 2 m/s (4 knots). In broken ice, or in open water with ice floes the craft may use higher speeds at the discretion of the master. Because several uncertainty factors are involved here, in particular the size of floes, which in practice is impossible to determine from the craft at speed, the rules do not address the maximum allowed speed or the maximum floe size. Further it is assumed that the frame angle is large ( > 70°) in the area hitting the floes at planing speeds.

### 38.6.5 Hull material

The rules refer for steel at all Structural levels. In Structural level 1 or 2 the rules may be applied for aluminium hulls. At Structural level 1 FRP is allowed as hull material, with the limitation, however, that sandwich construction is not allowed in underwater areas, including the ice zone area above the full load water line.

The mechanical properties for the materials are given in Chapter 9 (FRP), 13 (aluminium), and 16 (steel).

## 38.7 Ice load

### 38.7.1 The nature of ice load

The ice load is assumed to be a linear load working along the craft ice zone. When the craft proceeds in an ice field, the ice is broken partly by crushing in compression, and partly by bending.

The ice edge in contact with the hull is assumed to exert full load up to 0.6 m length, after that the load drops when the ice field breaks. The ice load is related to the thickness of the entire ice field.

The ice load is in some cases limited by the craft displacement, when the craft climbs up on the ice edge supported by a small contact surface.

It is assumed that ice blocks are hitting the rudder and propeller, but not solid ice.

The ice loads are assumed to depend on the following factors:

- Waterline angle $\alpha$ from the longitudinal direction
- Frame angle $\beta 0$ from the vertical direction
- Ice thickness h
- Ice bending strength $\sigma$
- Craft speed v

The definition of angles $\alpha$ and $\beta 0$ is shown in Figure 39.6. The ice bending strength is assumed to be 500 kPa. The range for both the waterline and the frame angles is 20°...40°. In case the frame angle is less than 20° the calculations shall use 20°, and correspondingly, if the frame angle exceeds 40° the calculations shall use 40°.

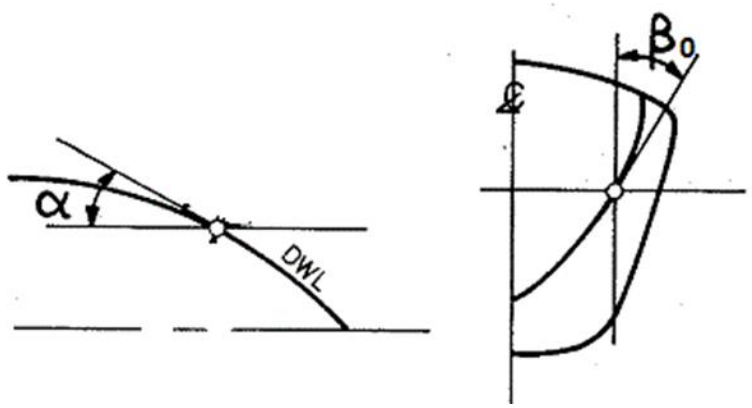


Figure 39.6 Waterline angle and frame angle from buttock

### 38.7.2 Ice load per contact surface unit length

The ice load per contact surface unit length shall be determined using the curves in Figure 39.7.

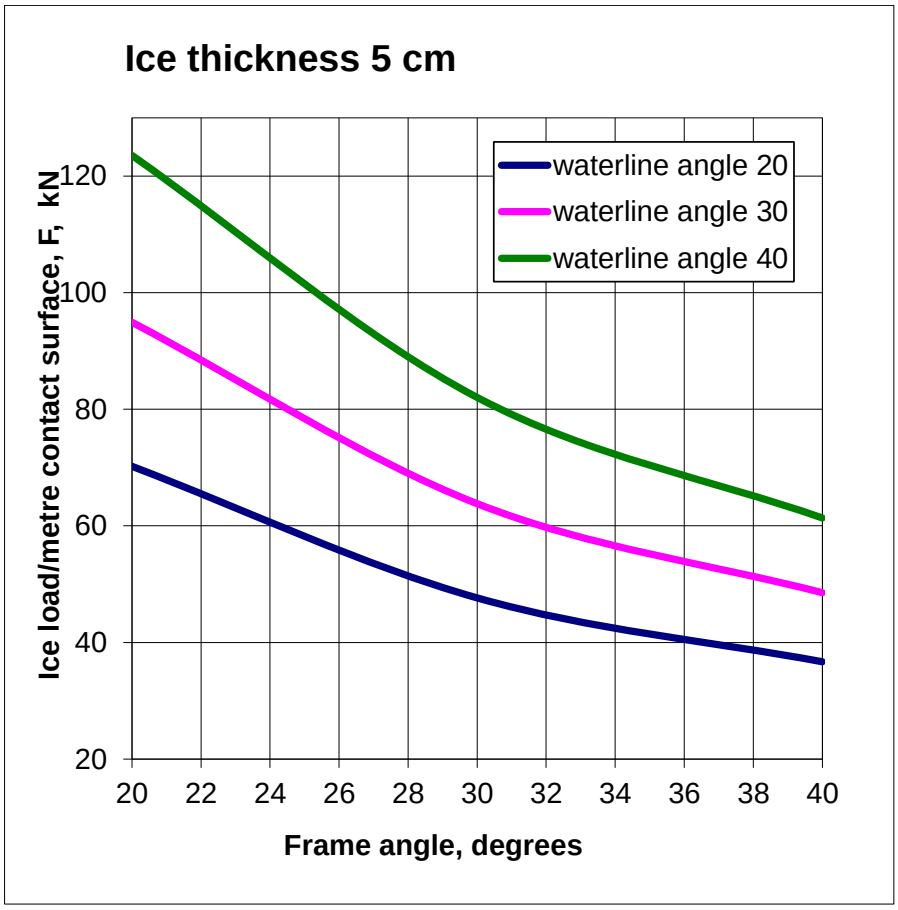

VTT EXPERT SERVICES LTD

Return to the cover page

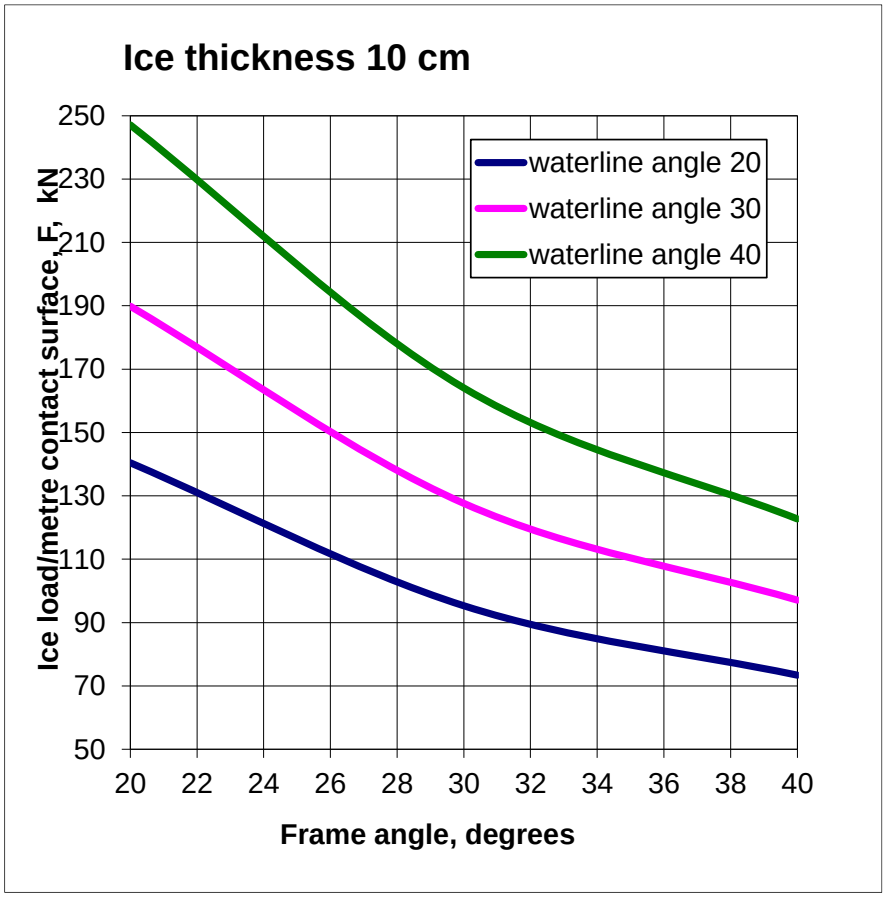

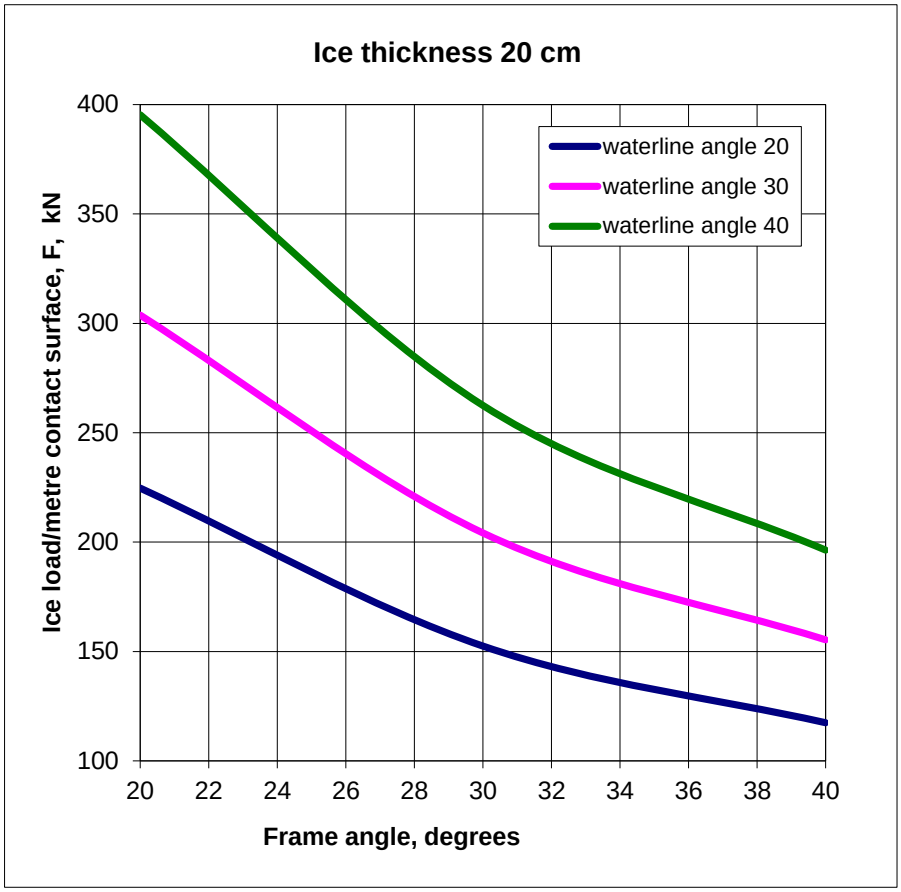


Figure 39.7 Ice load per meter of contact surface, F for ice thicknesses 5 cm, 10 cm, and 20 cm.

Note! In the formulas the ice thickness is given in millimeters!

The ice load per meter under consideration is the smallest of the following:

$$F_{lm} = min\left(F_{max} = \frac{0{,}003 \cdot m_{LDC}}{cos\,\alpha \sin\beta_0} \quad ; \quad F\right) \qquad \text{kN} \qquad (39.1)$$

### 38.7.3 Correction of the load based on contact surface length

The ice load shall be corrected based on contact surface length according to Formula (39.2)

$$c_a = \sqrt{\frac{600}{l_a}} \qquad \text{(max 1,0 ; min 0,35)} \qquad (39.2)$$

Where $l_a$ is to be taken from Table 39.2

Table 39.3.

| Structure | Framing system | $l_a$ [mm] |
|---|---|---|
| Shell | transverse | *b* |
| | longitudinal | 1.7· b |
| Ice frames | transverse | *s* |
| | longitudinal | *lu* |
| Ice stringers | - | Span between bulkheads or equal primary structures, *lu* |

### 38.7.4 Ice pressure

The ice pressure used for the ice zone panel structural design is calculated based on the linear load Flm as follows:

$$P_i = \frac{c_a \cdot Flm}{h} \quad \text{MPa} \qquad (39.3)$$

## 38.8 Structure

### 38.8.1 Structural arrangements in the ice zone

The structure in the ice zone area is assumed to be an either transversely or longitudinally stiffened hull shell. In a transversely stiffened structure the secondary stiffeners in the ice zone are ice frames placed approximately vertically, and transferring the loads to the ice stringers located at the lower and upper ends of the frames, or to a similar structure (for example a deck).

In a longitudinally stiffened structure the ice zone secondary stiffeners are placed longitudinally, see Figure 39.2

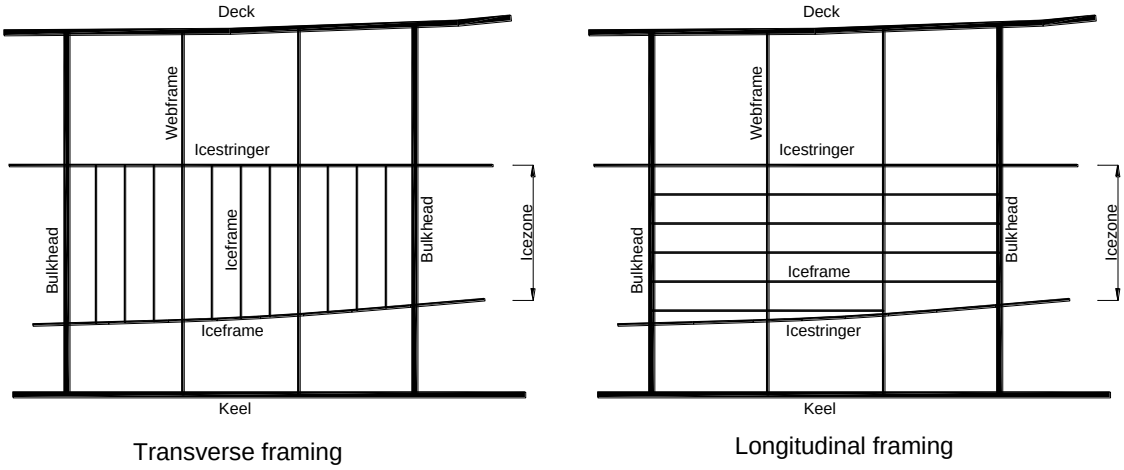


Figure 39.2 Transversely and longitudinally stiffened ice zone

### 38.8.2 Reinforced areas

Ice reinforcement includes strengthening of the following areas:

- Stem;
- Keel;
- Sharp chines;
- Shell in the ice belt;
- Stiffeners in the ice belt;
- Propeller shaft
- Rudder.

### 38.8.3 Keel and stem

The keel and stem from the bow to amidships shall be reinforced to stand ice loads at least up to the upper edge of the ice belt. This is considered fulfilled if the keel and stem profile section modulus is at least according to Formula (39.4) below.

The allowed stresses shall, depending on the material, be taken according to Chapter 10, 14, or 18.

$$SM_K = f_0 \cdot m_{LDC} \cdot L_H / \sigma_D \ \ [cm^3] \qquad (39.4)$$

Where:

$f_0$ = 0.10 for Structural level 1
$f_0$ = 0.11 for Structural level 2
$f_0$ = 0.12 for Structural level 3
$\sigma_D$ = design stress MPa

$\sigma_D$ = σy for metal
$\sigma_D$ = σUF/3 for FRP

When the section modulus for the keel or stem is determined, the effective flange width shall be taken as follows:

FRP: 20 · t1 [mm]

Aluminium: 60 · t1 [mm]

Steel: 80 · t1 [mm]

FRP craft shall have a steel reinforcement for the stem in the ice zone.

For FRP craft reinforced areas the minimum allowed fiber weight $W_{min}$ (Formula 10.9) shall be increased by a factor of 1.2.

### 38.8.4 Sharp chines

The section modulus of a sharp chine in the ice belt shall meet the Formula (39.5) requirement in the direction of the angle bisector, considering the effective flange according to item 39.8.3

$$SM = \frac{F_1 m \cdot c_a \cdot l_u^{\,2}}{11 \cdot \sigma_D} 10^{-3} \qquad \text{[cm3]} \qquad (39.5)$$

### 38.8.5 Hull shell

*38.8.5.1 Transversely stiffened shell*

The required thickness for a transversely stiffened shell is calculated according to Formula (39.6)

$$t = 0{,}667 \cdot b \sqrt{\frac{0{,}75 \cdot f_1 \cdot P_i}{\sigma_D}} + t_C \qquad \text{[mm]} \qquad (39.6)$$

$$f_1 = 1{,}3 - \frac{4{,}2}{\left({}^{h}/_{b} + 1{,}8\right)^2} \qquad f_1 \leq 1{,}0 \qquad (39.7)$$

Where:

$\sigma_D$ = design stress:

$\sigma_D = \sigma_y$ for metals;

$\sigma_D = \sigma_{UF}/3$ for FRP;

$t_C$ = kulumis- ja korroosiolisä:

For steel over the whole ice zone +1 mm

For FRP over the length 0.2 $L_{WL}$ from bow +1 mm

*38.8.5.2 Longitudinally stiffened shell*

The required thickness for a longitudinally stiffened shell is calculated according to Formula (39.8)

$$t = 0{,}667 \cdot b \sqrt{\frac{p_i}{f_2 \cdot \sigma_D}} + t_C \qquad \text{[mm]} \qquad (39.8)$$

Where:

$$f_2 = 0{,}6 + \frac{0{,}4}{h/b} \qquad (39.9)$$

The other definitions are the same as for Formula (39.6)

### 38.8.6 Frames

*38.8.6.1 39.8.6.1 Transverse frames*

The section modulus for transverse frames shall be at least

$$SM = \frac{F_{1m} \cdot c_a \cdot s \cdot l_u}{m_t \cdot \sigma_D} 10^{-3} \qquad \text{[cm}^3\text{]} \qquad (39.10)$$

Where:

mt = the end restraint of the frame end,

4 simply supported

6,8 fixed

$\sigma_D$ = allowed design stress MPa

$\sigma_D$ = σY for metal (σY = yield strength)

$\sigma_D$ = σUF/3 for FRP (σUF = flexural breaking strength)

The frame web shear area shall be at least

$$A = \frac{1{,}2 \cdot F_{1m} \cdot c_a \cdot s}{2 \cdot \tau_D} 10^{-2} \qquad \text{cm}^2 \qquad (39.11)$$

Where:

$\tau_D$ = design shear stress [MPa]

$\tau_D = \sigma_Y/\sqrt{3}$ for metals

$\tau_D = \tau_U/3$ for FRP, $\tau_u$ = shear breaking strength in the laminate plane for the stiffener web.

*38.8.6.2 Longitudinal frames*

The section modulus for longitudinal frames shall be at least

$$SM = \frac{f_3 \cdot F_{1m} \cdot c_a \cdot l_u^{\,2}}{m_s \cdot \sigma_D} 10^{-3} \quad \text{cm}^3 \qquad (39.12)$$

Where:

$f_3 = (1 - 0.2 \cdot h/s)$
$m_s$ = 13 for continuous frame ending with brackets
$m_s$ = 11 for continuous frame without brackets

The frame web shear area shall be at least

$$A = \frac{2{,}16 \cdot f_3 \cdot F_{1m} \cdot c_a \cdot l_u}{2 \cdot \tau_D} 10^{-2} \quad \text{cm}^2 \qquad (39.13)$$

Where:

$\tau_D$ = design shear stress, [MPa]
$\tau_D = \sigma_Y/\sqrt{3}$ for metals
$\tau_D = \tau_u/3$ for FRP, $\tau_u$ = shear breaking strength in the laminate plane for the stiffener web.

*38.8.6.3 Ice stringers*

Ice stringers are dimensioned in the same way as longitudinal frames while considering the ice pressure reduction coefficient ca see formula 38.2. Ice stringers shall be supported sideways against lateral buckling.

### 38.8.7 Propeller shaft

The shaft diameter requirement in Chapter 23 shall be multiplied with the following factors

Structural level 1: 1.10
Structural level 2: 1.15
Structural level 3: 1.20

### 38.8.8 Consideration of side accelerations

The presence of side accelerations shall be considered for the structure and installations.

### 38.8.9 Reduction and reverse gear

The reduction and reverse gear shall be sized for the shaft end torque considering the following coefficients applied to the engine power:

Structural level 1: 1.25
Structural level 2: 1.35
Structural level 3: 1.50

Additionally, the sizing of the reduction and reverse gear shall be based on the manufacturer's recommendations for ice navigation.

### 38.8.10 Rudder and steering system

For Structural level 2 and 3 there shall be an ice knife aft of the rudder, able to crush the ice without exceeding the knife's yield strength.

The steering gear components shall be sized to stand the loads corresponding to the rudder stock yield strength.

For Structural level 2 and 3 there shall be rudder stoppers at the maximum angle.

Rudder stock, rudder, and steering gear including components shall be sized according to Chapter 20 with the following additional factors applied to the force F1:

Structural level 1: 1.50
Structural level 2: 2.00
Structural level 3: 2.50

The force F2 is calculated as presented in Chapter 20, but always at minimum 18 knots speed.

### 38.8.11 Icing on deck and superstructures

The weight of icing on deck and superstructures shall be considered in the stability calculations, see item 4.7.5

The structure shall stand removal of icing without suffering damage.

The dimensioning of the working deck shall be based on at least 1 t/m2 deck load.

# 39 ADDITIONAL NOTATION “DECK CRANE”

## 39.1 Objective

In this chapter additional requirements are given for craft equipped with a deck crane.

## 39.2 Additional Notation “Deck Crane”

Craft meeting the requirements in this chapter are assigned the Additional Notation ”Deck Crane”.

## 39.3 Scope of application

The following requirements refer for power-operated deck cranes.

## 39.4 Prevention of overload

### 39.4.1 Restrictions

The lifting gear shall be arranged so the following is avoided:

Lifting of loads exceeding the crane designed capacity;

Large heeling angles resulting from unsuitable combinations of boom length and cargo weight.

### 39.4.2 Stability

When a deck crane is used, the static heeling angle shall not exceed 10° for any combination of cargo weight and boom length.

At this heel the remaining righting moment lever curve positive area shall be at least 0.01 metreradians.

In case the assessment is done experimentally, the test shall be performed with a short boom in horizontal position. With a load corresponding to the desired maximum lifting moment the heeling angle shall not exceed 10°.

After this the load shall be increased by 20%. With this load there shall not be any signs of insufficient stability, and the static heeling angle must not exceed 15°.

### 39.4.3 Maximum allowed load

The lifting device shall have a sign in a visible location, stating the maximum allowed load. Other markings, which may be confusing, are not allowed.

## 39.5 Documentation of the strength

### 39.5.1 The strength of the crane

Every lifting device shall have a certificate issued by an accredited testing facility, stating the load for which the device is approved.

### 39.5.2 The strength of the lifting device attachment

Attachments built of metal shall be dimensioned so that the safety factor to yield is at least 2 and to ultimate strength at least 4. This safety factor does not refer to bolts and other type approved elements coming with the lifting device.

# 40 ADDITIONAL NOTATION HOVERCRAFT

## 40.1 Objective

The objective of the rules in this chapter is to specify additional requirements and exceptions for covering the risks hovercraft encounter.

## 40.2 Additional Notation ”Hovercraft”

Craft meeting the requirements in this chapter are assigned the Additional Notation ”Hovercraft”

### 40.2.1 References

In this chapter reference is made to the following documents:

- ISO 12215-5:2008 Small craft - Hull construction and scantlings – Part 5: Design pressures for monohulls, design stresses, scantlings determination
- ISO 12215-6:2008 Small craft - Hull construction and scantlings – Part 6: Structural arrangements and details
- ISO 12216:2002 Small craft – Windows, portlights, hatches, deadlights and doors. Strength and watertightness requirements
- MCA – The Hovercraft Code, (8.12.2015)

## 40.3 Documentation

For assessment of the special requirements and exceptions given in this chapter the following documentation is required:

Drawings, test protocols, and reports showing compliance with the requirements in items 42.6...42.15.

## 40.4 Scope of application

These rules are applied to craft considered to be hovercraft according to the following definition:

Hovercraft is a vehicle which during operation is supported by an air cushion, either partly (SES) or fully.

## 40.5 General requirements

Craft with the Additional Notation ”*Hovercraft”* shall meet the requirements stated in Chapters 1...32 in these Commercial Craft Rules, as applicable considering the exceptions and additional requirements specified in this chapter.

## 40.6 Environmental conditions

The requirements stated in this chapter are suitable for Design Category C and D conditions, however, the maximum allowed significant wave height here is 1 m.

Hovercraft which are used in the winter shall meet the requirements in item 41.9.2 related to winter conditions.

## 40.7 Stability and flotation

The stability for hovercraft may be based on the air cushion, therefore the stability shall be assessed both with air cushion, and without it.

## 40.8 Structure

### 40.8.1 Scantlings

The structure shall be dimensioned as a displacement motor craft according to standard ISO 12215-5 for Design Category D.

The windows shall meet the strength and water tightness requirements for Design Category D according to standard ISO 12216.

The minimal dry fibre weight ($W_{MIN}$) and thickness ($t_{MIN}$) can be determined with the formulas in standard ISO 12215-5 provided the structure otherwise meets the above requirements.

Otherwise the chapters concerning structure and manufacture in this Commercial Craft Rule apply.

### 40.8.2 Operation on ice

#### *40.8.2.1 On smooth ice*

In case the hovercraft is designed for operation on ice, it shall be ensured that the hovercraft watertight shell is not chafed through.

#### *40.8.2.2 Crossing ice channels*

In case the hovercraft is designed for the crossing of ice channels, it shall be ensured that the uneven surface (ice blocks) does not cause damage to the hovercraft watertight shell.

The loads are difficult to predict, and it needs to be made sure experimentally or by calculation that damage to the contact surfaces does not endanger the hovercraft watertight shell.

### 40.8.3 Operation on land

In case the hovercraft is designed for operation on land, it shall be made sure experimentally or by calculation that the hovercraft watertight shell is not chafed through.

## 40.9 Propulsion machinery

### 40.9.1 General

The propulsion machinery shall meet the requirements in Chapter 21, with the exception that also engines designed for aircraft purposes can be accepted.

Petrol fuel can be allowed provided that the engine is installed outside the enclosed hull.

### 40.9.2 Cooling system

The cooling system shall be approved by the engine manufacturer.

## 40.10 Personal safety

Hovercraft shall meet the requirements in Chapter 26, further an air propeller shall be protected so it does not cause danger to crew or passengers.

### 40.10.1 Air propeller protection

An air propeller shall be protected so any part of the human body cannot come into contact with the rotating propeller from the side or deck of the hovercraft. See Figure 41.1.

A protective net shall stand 450 N of external force at any location on an area of 100 x 100 mm without endangering its protective function.

Protection guardrails shall stand 1.8 kN force in any direction without breaking.

Side or front protection less than 800 mm from the propeller shall not allow a round bar with 50 mm to pass through, and from the openings in this protection there shall be at least 250 mm distance to the propeller swept area. A tight impermeable protection can be closer to the swept area (for example a propeller duct).

Protection located on the side of the propeller shall be less than 800 mm from the swept area.

There shall be protection in the sector forward of the propeller at least 800 mm from it preventing a person from accidentally accessing or stumbling into the propeller. Such an arrangement may be a steeply sloping surface where it is impossible to stand, the outer edge of the hull, or an at least 600 mm high guardrail.

Behind the propeller there shall be an at least 800 mm wide safety area to an at least 600 mm high outer edge of the hull, or a guardrail with the same height.

Behind the propeller there shall be a warning sign with at least 20 mm high letters:

BEWARE OF THE ROTATING PROPELLER!

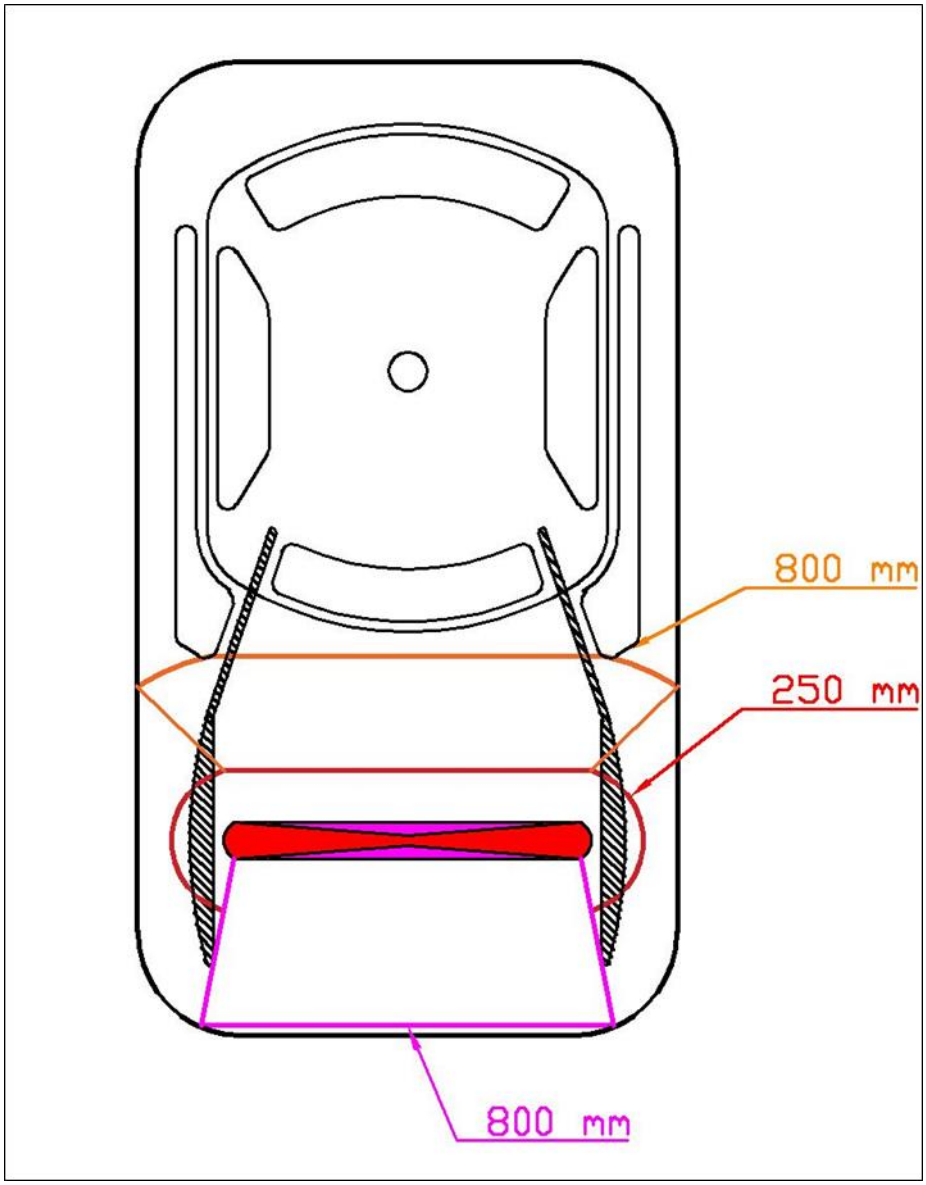


Figure 41.1. Protection of air propeller, comprising a tight propeller duct and guardrails. Aft the protection is the craft outer edge, or a guardrail.

### 40.11 Fire safety

The engine space shall be fitted with a fixed fire extinguishing system, or alternatively a fire port located at the steering position. In addition to this the requirements in Chapter 27 shall be met.

## 40.12 Handling characteristics

### 40.12.1 Air cushion supported

It shall be possible to control and maneuver the hovercraft over smooth ice and over water. If required for turning on glassy ice, it is allowed to deflate the air cushion during a turn. A sudden deflation during a turn must not, however, upset the stability of the hovercraft.

### 40.12.2 Without air cushion

The hovercraft shall be able to operate in water without an air cushion.

## 40.13 Noise

A hovercraft must not meet the noise level requirements in Chapter 32.

In a hovercraft not meeting the Chapter 32 requirements for interior noise levels there shall be a warning sign within the view of the pilot reminding about wearing hearing protection.

## 40.14 User Manual

The User Manual shall explain the hovercraft peculiar features mentioning at least the following:

- Special features related to the maneuvering of the hovercraft
- Turning over various surfaces
- Braking over various surfaces
- Limitations when operating over land
- Limitations for wind speed and significant wave height
- Limitations when crossing ice channels
- Inspection procedures for surfaces subject to wear
- Instructions for hearing protection (if required)
- Service instructions
- Any dangerous issues